HIKARI® 富山

FOCUSING ON
NEW TECHNOLOGY AND AUTOMATION
专注新技术与自动化

HXT6800T系列 DIRECT-DRIVE HIGH-SPEED UP-DOWN FEEDING OVERLOCK MACHINE 直驱上下送布高速包缝机

使用说明书
INSTRUCTION MANUAL BOOK

上海富山精密机械科技有限公司
Hikari(shanghai)precise Machinery Science&technology Co.,Ltd

中国上海市金山区朱泾工业园区中达路800号
NO.800.zhongda Road,jinshan Zone,shanghai,china
电话：（00）86-21-67311111
TEL：（00）86-21-67311111
传真：（00）86-21-67311311
Fax：（00）86-21-67311311
E-mail:hikari@chinahikari.com
http:www.chinahikari.com

此说明书仅作参考，如有更改恕不另作通知。
This manual is only for reference.
IF there is any modification , we apologize for the changing hence caused.

CE

通过 ISO9001:2008
质量管理体系认证

重要安全事项

1. 使用此缝纫机时，必须遵守包括如下项目的基本安全措施。
2. 使用此缝纫机之前，请阅读本使用说明书在内的所有指示文件。同时应该将此使用说明书妥善保管，以便能够随时查阅。
3. 使用此缝纫机和缝纫机动作中，所有的安全装置应安装到规定的位置。没有安装规定的安全装置的缝纫机禁止使用。
4. 此缝纫机应由接受过培训的操作人员来操作。
5. 使用缝纫机时，建议戴安全防护眼镜。
6. 发生下列情况时，应立即关掉电源开关，或拔下电源线插头。

   6-1 机针、弯针、分离器等穿线和更换旋梭时。

   6-2 更换机针、压脚、针板、弯针、分离器、上下送布牙、护针器、支架、布导向器等时。

   6-3 修理时。

   6-4 工作场所无人了或离开工作场所时。
7. 缝纫机以及附属装置使用的机油、润滑脂等液体流入眼睛或沾到皮肤上时，或被误饮时，应立即清洗有关部分并去医院治疗。
8. 禁止油手触摸打开了缝纫机开关通电的零件或装置。
9. 有关缝纫机的修理、改造、调整应由受过专门训练的技术人员或专家来进行。
10. 一般的维修保管应由受过训练的人员来进行。
11. 有关缝纫机的电器方面的修理、维修应有资格的电器技术人员或专家的监督和指挥下进行。
12. 修理、保管有关空气、汽缸等压缩空气的零件时，应切断空气压缩机供气源后再进行。
13. 缝纫机的使用期间应定期进行清扫。
14. 为了正常安全运转，应安装地线。同时应在不受高频焊接机等强噪音源影响的环境下使用。
15. 电源插头应用具有电器专门知识的人来安装。电源插头必须连接到接地插座上。
16. 缝纫机指定用途以外不能使用。
17. 对缝纫机的改造、变更应符合安全规格，并采取有效的安全措施。另外，对于有关改造和变更，本公司概不负责。
18. 本使用说明书上采用以下 2 个警告符号。

有损伤操作人员、维修人员的危险。

安全上需要特别加以注意的事项。

为了安全地使用缝纫机的注意事项

危险

1. 为了防止触电事故，请不要在接通电源的状态下打开控制箱的外壳或触摸控制箱内的零件。

注意

1. 为了防止人身事故的发生，请不要在卸了皮带护罩、眼睛防护罩等安全装置的状态下运转缝纫机。
2. 为了防止被卷入的人生事故的发生，请使用带电机防护罩的马达。
3. 为了防止触电事故的发生，请不要卸下电源地线的状态下运转缝纫机。
4. 为了防止被卷入的人身事故的发生，缝纫机运转途中请不要将手指、头发、衣服靠近皮带轮，也不要把东西放到上面。
5. 为了防止人身事故的发生，打开电源后或缝纫机运转中请不要把手指放到切布刀和机针的附近。
6. 为了防止人身事故的发生，缝纫机运转中请不要把手指放到眼睛防护罩内。
7. 为了防止触电、漏电、火灾事故，拔插电源线前一定先关掉分缝纫机电源，手持电源插头进行插拔。
8. 为了防止突然启动造成人身事故，离开缝纫机时请您一定关掉电源。
9. 为了防止突然启动造成人身事故，发生停电后一定关上电源。
10. 为了防止突然启动造成人身事故，拆卸电机防护罩时，请一定关掉电源，用脚踩踏板确认不动后再拆卸。
11. 为了防止突然启动造成人身事故，检修、调整、扫除、穿线、换针时，请一定先关掉电源，用脚踩踏板确认不动后再进行。
12. 为了防止缝纫机落下造成人身事故，搬运缝纫机时请不要手拿布台护罩。拿布台护罩后护罩会打开，缝纫机会掉下来。

目 录

1. 前言……5
2. 警告标记……5
3. 安全措施
- 使用环境……6
- 安全措施……6

4.各操作过程的注意事项
- 开 箱……7
- 搬 运……8
- 安装·准备 ……8
- 使用缝纫机油 ……9
- 运转缝纫机前的注意事项 ……9
- 运转缝纫机中的注意事项 ……9
- 维护、检查、修理 ……10

5.警告标签粘贴的位置与安全保护装置 ……11
6.安全保护装置
- 护眼板 ……12
- 沪指架 ……12
- 压脚 ……12
- 前护盖 ……12
- 大盖 ……12

7.日常操作中了解的常识问题
- 台板的加工图 ……13
- 关于供油 ……14
- 给 HR 装置供油 ……15
- 机油的更换 ……15
- 排油的方法 ……15
- 检修和更换过滤器 ……15
- 缝纫机的清扫 ……15
- 穿线的方法 ……16
- 机针的更换 ……16
- 线状态的调节 ……17
- 压脚的开和关 ……17
- 压脚压力的调节 ……17
- 差动比的调节 ……17
- 上送布牙压力的调节 ……18
- 上送布牙前后的调节 ……18
- 上送布牙的上下的调节 ……18
- 针脚长度的调节 ……18
- 上刀的更换 ……19
- 下刀的更换 ……19

- 链幅的调节 ……19
- 刀的研磨方法 ……19
- 针打线片的标准安装位置和调节 ……20
- 针过线件的标准安装位置和调节 ……20
- 弯针打线片和过线件的标准安装位置与打线凸轮打线量的调节 ……21
- 调节基准表 ……22
- 标准用针表 ……22
- HX 系列子型号规格表……22

1. 前 言

- 本操作说明书将描述如何注意产品的安全使用。
- 在使用该机器之前，请务必阅读本使用说明书，充分理解及掌握缝纫机的操作、检查、调整、维修等方法之后，再进行使用。

2. 警告标记

在本公司的产品及本书中，为了安全使用产品，根据危险程度将警告表示分别使用，务必注意书中的提示。

警告标签应贴在较醒目的地方。若有标签剥落或污损时，应及时更换，贴上新的标签。如需更换用新的标签，请联系本公司销售部。

提醒注意的标记以及报警用语

危险	表示危险性极大，弄错操作等时会有可能至于死亡或受重伤的危险。
警告	操作有误时，会至于受重伤，甚至发生死亡事故的危险。
注意	操作有误时，有可能受轻伤或中等伤害，或会发生损伤物质的危险。

说明图表记号

	必须严守指示，应按其内容准确操作
	万一弄错操作，会有触电的危险。
	弄错操作，会招致手指受伤。
	有接触高温烫手受伤的危险。
	绝对禁止。
	需要进行修理、调整等维修工作时，或有可能落雷的危险时，应预先把电源插头由供电的插座拔掉，以免意外。
	连接地线
→	表示缝纫机传动轮旋转方向。

3. 安全措施

➢ 使用环境

使用的环境有可能给缝纫机的寿命、性能及安全性带来不良影响。

为了安全保护 ，请勿在下述环境条件之下使用。

1. 在靠近高频焊接机等产生干扰的机器设备旁边。
2. 产生药品蒸气气氛的地方，及受药品飞溅等地方使用或保管。
3. 屋外、高温高湿、直接曝晒阳光的地方。
4. 周围的温度、湿度很大，会给缝纫机带来坏影响的地方。
5. 额定电压常超过±10％以上的电压变动较厉害的地方。
6. 电源容量无法确保控制马达规格上所需要的容量时。

➢ 安全措施

（1）进行维修保养、检验时的安全保护

- 在对缝纫机进行检查、修理、清扫等维护作业时，请关掉电源开关，将电源插销从插座上拔下，并确认踩缝纫机踏板也不会转动之后再进行操作。
  但是，有必要接通电源进行作业时，请制定防止缝纫机以外转动或操作者错误而导致危险的安全操作准则，并遵守一切安全防护准则。

- 在进行以下作业时，务必关掉电源开关，将电源插销从插座上拔下之后进行。
  - 加油
  - 穿线
  - 打扫缝纫机
  - 换机针
  - 进行供油元件的清扫和更换时
  - 更换机油

- 在进行以下作业时，请务必关掉电源开关之后进行。
  - 调节针脚时
  - 调节差动比时

- 实施定期检修、保养时，应限由充分熟练省力装置以及缝纫机的维修工作的专门技术员来进行。

- 请勿按客户的任意判断而加以改造或更改，会招致事故的原因。

※如有改造或更改的需要，应先联系经销商或本公司销售部询问。

（2）开始运转前的检验事项

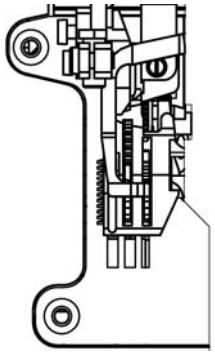
(图1)

- 在开始操作运转缝纫机前，先检查缝纫机缝纫部分，看是否有损伤、功能不良等问题。万一有异常现象时，应马上修理或采取必要的措施。

- 务必先确认针箍是否固定好。
  ※请注意针尖有危险。

- 在使用缝纫机之前，务必确认压脚是否在正确的位置。（用手轻轻转动手轮，看针尖是否落在压脚的针孔中心）（图 1）

- 务必检查压脚是否牢固的固定好。（使用抬压脚机构抬起压脚，用手前后左右扳动，检查看压脚是否松动）（图 2）

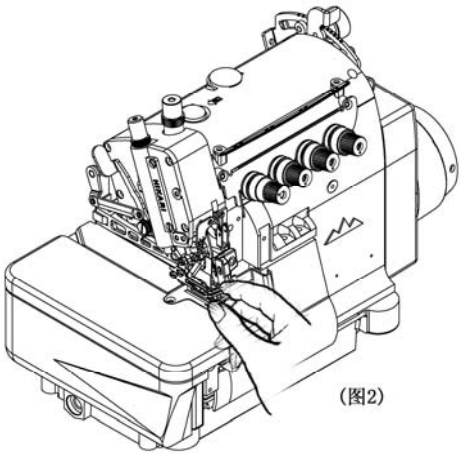
(图2)

（3） 培训

- 为了防止事故，操作人员及维修员应先掌握机器的使用和有关技能。

4. 各操作过程的注意事项

➢ 开箱

1. 缝纫机机头出厂时包装好后装入纸箱运出的。从印刷在纸箱上的标记字样确认上下后，请从上到下按顺序开箱。
2. 把缝纫机机头从缓冲包装材料里拿出时，绝对不要提拿与机针部位或过线器等有关的部件，否则会发生危险或损伤机器。
3. 在取出缝纫机机头时，请注意重心的位置，小心谨慎的取出。
4. 开箱用过的纸箱如果以后还用的话，请好好保存放好。

包装材料的处理

- 包装材料包括木头、纸张、纸箱、VCE 纤维。请顾客将包装材料正确适当的进行处理。

缝纫机废物的处理

1. 缝纫机的废物，请客户负责进行处理。
2. 制造缝纫机使用的材料有铁、铝、锌及各种材料。
3. 缝纫机的废物应遵照当地环境保护的有关规定进行处理。必要时委托专门的厂家进行处理。

※有油污的部件务必遵照当地环境保护的有关规定，分别进行处理。

警告

➢ 搬运

1. 缝纫机机头的搬运一定要两个人以上进行。另外，用人直接搬运应只限于搬往缝纫机台板或小台车进行。
2. 移动缝纫机机头时，用右手抓住手轮及电机罩，左手垮在机头里，扎实牢固的搬起。（图 3）
   缝纫机上沾有油污在搬运时容易滑脱摔坏，搬运请好好擦净机头上的油污。
3. 在往缝纫机台板上或小台车上搬运时，请注意不要过分冲击或震动，以免缝纫机倒斜造成危险。
4. 如果要第二次运送缝纫机并要包装时，请一定擦干净机头上的油污。否则，搬运时会滑脱摔坏机头或油污使包装材料变质穿底。

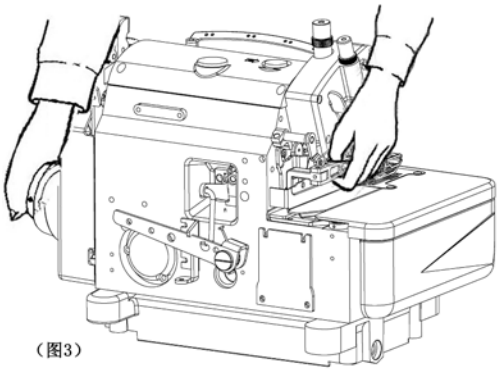
（图3）

注意

➢ 安装・准备

缝纫机台板

1. 请使用能充分承受缝纫机机头重量及搬运时产生的反作用力的缝纫机台板（台板、铁架）。
2. 应充分考虑缝纫机装配部件和操作光线的明亮度，放置在容易作业的环境中。如果光线不是十分明亮时，应根据需要安装照明电灯。
3. 在运转缝纫机时，为防止操作者踩踏板时脚滑脱造成事故，一定要在缝纫机踏板上安装防止滑脱的垫子。
4. 根据操作者操作的姿势，调整台板面的高度（工作时的高度）。

警告

接线

1. 请牢固的查好缝纫机机头与电机连接线的插头。
   缝纫机机头与电机用连接线进行连接时，务必在将电源开关关闭的状态下进行操作。
2. 在使用中请不要给连接线过多的力。
3. ⃠ 请不要过度弯曲连接线。
4. 接近运动部件的连接线，应最小距离在 25mm 处进行安装。
5. 必要时考虑连接位置或加设护罩来保护连接线。
6. ⃠ 固定连接线时绝对不要使用书针。

注意

接地

1. 接地线是按每台缝纫机分别装设专用的接地线，不应与其他机器共用。
2. 在缝纫机机头的规定地点准确地装设接地线。

警告

➢ **使用缝纫机油**

1. 在油盘内没有注入油之前绝对不要运转机器。机油请使用指定的缝纫机专用润滑油。（相当于 ISO 粘度等级 VG22）。
2. 机油进入眼睛会使眼睛发炎，所以在使用时请戴防护眼镜以免机油进入眼睛。

※万一进入眼睛，请用干净水冲洗 15 分钟，再请医生治疗。

3. 接触皮肤后，请马上用水和肥皂洗干净。
4. 绝对不要使机油进入口腔。
5. 机油请保管在孩子摸不到的地方。万一进入口腔，不要硬性呕吐，马上请医生进行治疗。
6. 废油、废容器的处理方法必须遵照环境保护法相关的措施正确处理。如不知道请与经销商联系后，再进行处理。
7. 为了防止灰尘、水分的混入，使用完后保管机油时请盖紧油箱盖，放在没有阳光直射的阴凉处保管。

警告

➢ **运转缝纫机前的注意事项**

缝纫机台板

1. 打开电源前，请确认接线或接头是否有损伤、脱落、松动等外观上的异常。
2. 打开电源时，请不要将手放在机针附近或自动切线装置剪刀。
3. 操作缝纫机者应为受过培训、充分理解本书及使用说明书的内容之后，再进行操作使用。
4. 关于缝纫机机头上的危险、警告标志应熟读并理解[2.警告表示]，必要时应对使用者进行安全教育。
5. 最初使用的一个月应降低速度。请使用在最高转速的 3/4 以下的转速。

警告

➢ **运转缝纫机中的注意事项**

1. 在拆卸下护眼板、护指架、传动护罩等安全装置下，请不要运转缝纫机。
2. 缝纫机在运转中是很危险的，绝对不要将手放入机针下。
3. 缝纫机在运转中有危险，手指、头发、衣服请勿靠近针杆和自动切线装置剪刀附近。
   同时，在上述场所，请勿放置剪刀、镊子、工具等。
4. 在不使用缝纫机时或者操作者离开缝纫时，一定要将电源开关关掉。
5. 停电时务必将电源关掉。

6. 在操作缝纫机时，请穿着不易被机械卷入的服装。
7. 缝纫机在运转中，请不要在缝纫机台板上放置工具及其他与缝纫无关的物品。

⚠ 注意

➢ 维护、检查、修理

1. 维护、检查、修理的作业应由受过特别训练的人并在充分理解本书及使用说明书的内容之后，再进行作业。
2. 为了维护、检查、修理要将缝纫机机头放倒时、务必将电源开关关掉，把电源插头从插座上拔下，并确认即使踩缝纫机踏板缝纫机也不会转动之后，再进行操作。
3. 对于缝纫机机头的日常检查或定期检查，应按照本书及使用说明书的指示，切实认真的进行。
4. 缝纫机的修理或部件的更换请使用原装部件。对于不恰当的修理、调整或使用假冒伪劣部件所造成的事故，本公司将不负一切责任。
5. 请不要根据顾客自己的判断对缝纫机进行改造。否则因改造而发生事故，本公司将不负一切责任。
6. 临时因修理、调整而拆卸下的安全装置、安全护罩，待作业完成后务必按原来的状态安装好。
7. 维护、检查、修理的作业完成后，请检查接通电源之后是否确实没有危险。

5. 警告标签粘贴的位置与安全保护装置

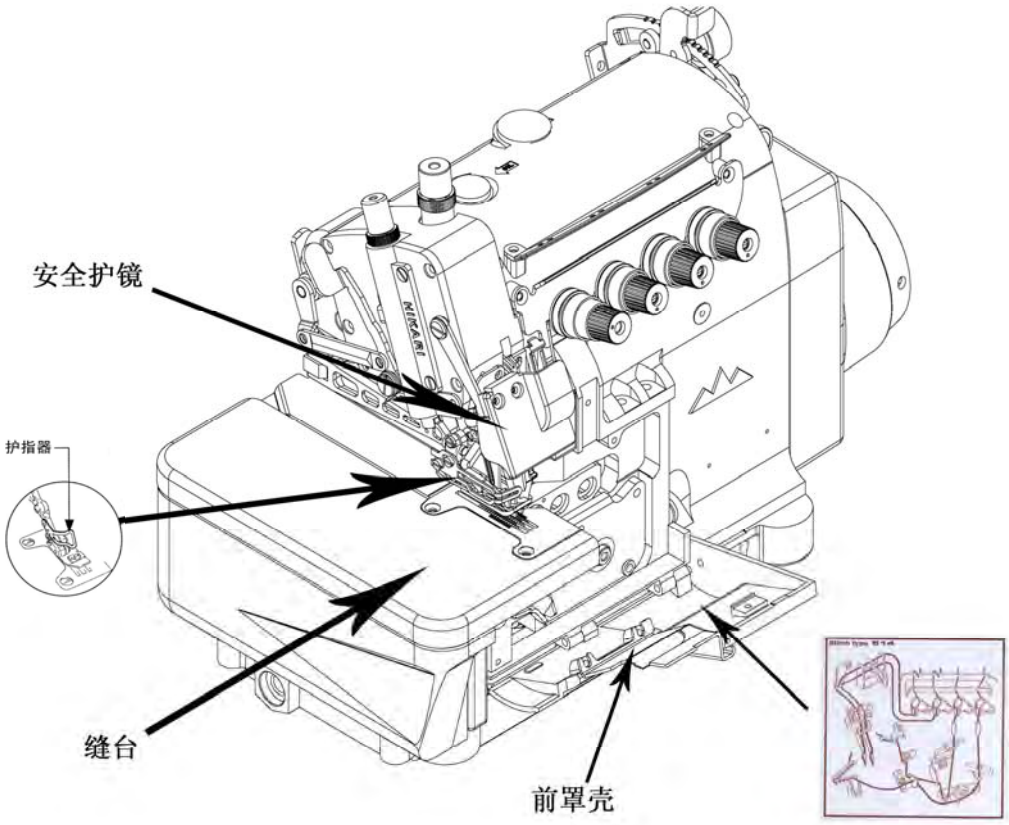

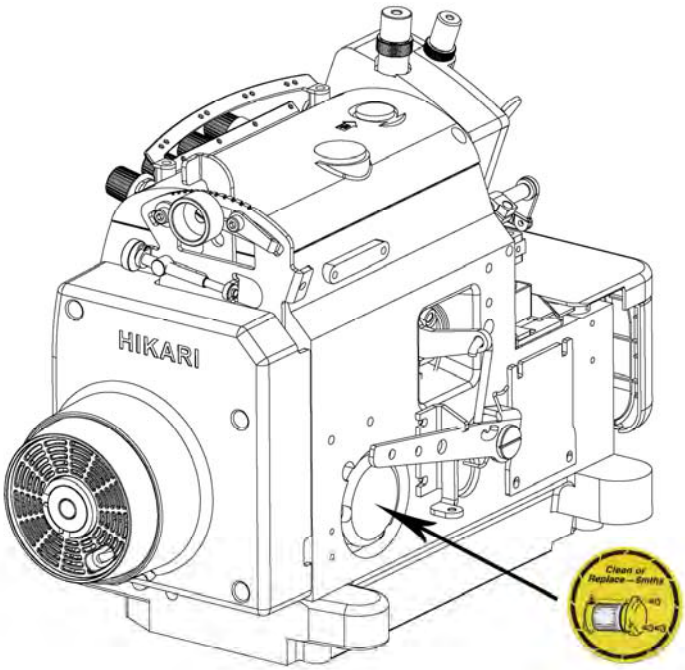

（图4）

6. 安全保护装置

这个项目是为了使大家都知道各种安全保护装置，并记载了各部分的注意事项。

⚠ 注意

安全保护装置

➢ **护眼板**

⃠ 不要打开

为了眼睛的安全，绝对不要在打开护眼板的状态下操作缝纫机。护眼板是为了在缝纫中针断了时，使断针不会飞入眼睛而安装的护眼罩。

➢ **护指架**

⃠ 不要把手伸入

为了防止上下运动的机针与人接触而产生危险，在机针附近安装了护指架。但是，在护指架上方为了便于穿线而留有间隙，如果将手指从间隙伸入，机针有可能会刺上手指造成危险。

➢ **压脚**

⃠ 不要把手伸入

从针板表面压脚的上升量是 5mm 以上，这个间隙有夹手指的危险。在用膝盖开关抬升压脚时或用踏板自动抬升压脚时，请不要将手指伸入压脚上方。

➢ **前护盖**

⃠ 不要把手伸入

弯针的运动从缝纫机正面看时，是进行左右往复的圆弧运动。为了避免进行圆弧运动的弯针与人接触，务必请在前盖板闭合的状态下操作缝纫机。

➢ **大盖**

⃠ 请勿打开

缝纫机在运转中，为了避免链弯针打线凸轮和弯针与热接触，请务必在关闭大盖的状态下操作缝纫机。

7. 日常操作中应了解的常识问题

➢ 台板的加工图

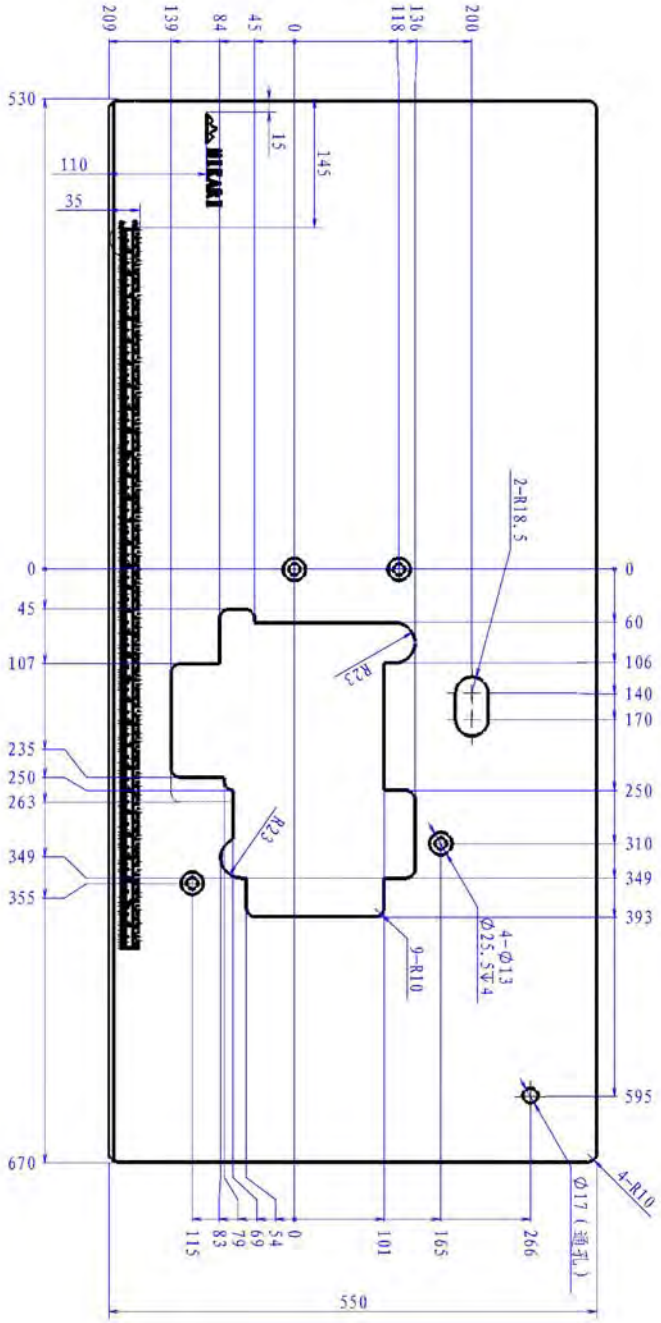

(图 5)

➢ 关于供油

注意

在加机油或换机油时，请务必使用本公司提供的机油。如果使用提供以外的机油，有可能损坏缝纫机。

1. 使用的油类

请使用本公司提供的“HIGH SPEED SEWING MACHINE OIL ”（高速低粘度润滑油）（ISO 粘度等级/VG22）

2. 供油的方法(图 6)

揭开供油口的盖子,加油至油面到达油标尺的 H 线和 L 线中间。加完油后，请盖好供油口的盖子 1。

3. 油的规定量（图 6）

油标尺 2 的 H 线和 L 线表示着油量的上限和下限。
为使油面经常保持在 H 线和 L 线之间，请常常检查注意加油。

4. 用手加油（图 7）

注意

在用手加油时，务必将缝纫机的电源关掉，将插头从电源插销上拔下来之后再进行。
第一次使用缝纫机时，以及使用已有一段时间没有使用的缝纫机时，请用给油瓶在针杆 3 和上弯针台 4 处分别给油 2～3 滴。

5. 检查机油的循环状况（图 8）

请在加完油后，踩下缝纫机踏板，使缝纫机运转，通过油窗 5 检查机油的循环状况是否良好。

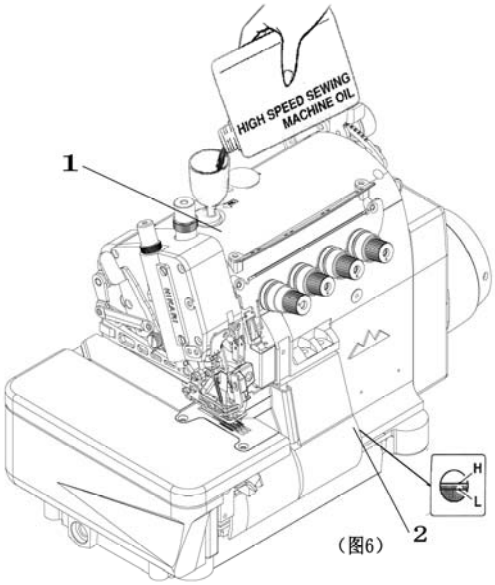

（图6）

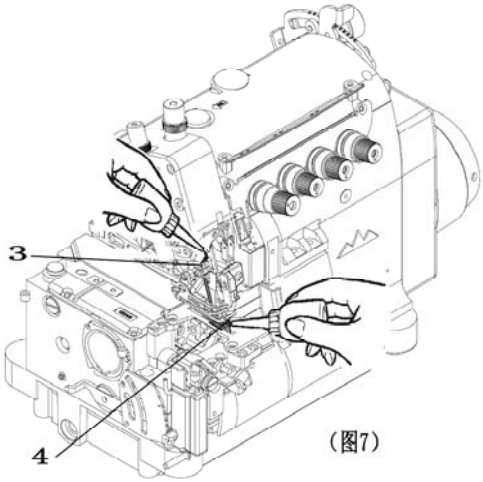

（图7）

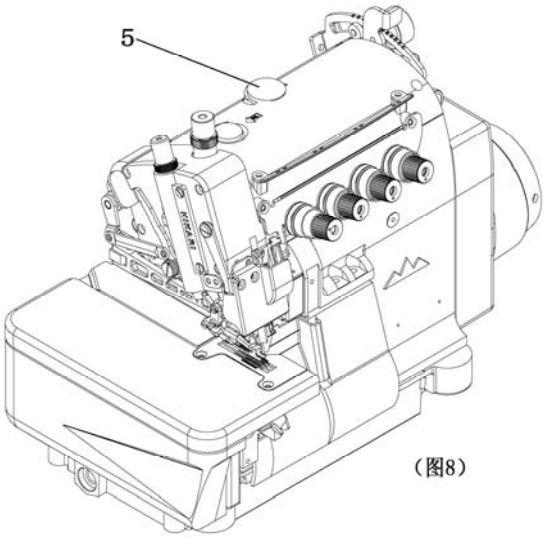

（图8）

➢ **给 HR 装置供油**

注意

在给 HR 装置供油时，务必将缝纫机的电源关掉，将插头从电源插销上拔下来之后再进行。

在 HR 装置的硅油盒 1 和 2, 为了防止机针断线加有硅油。请经常检查，请尽早补充硅油。（图 9）

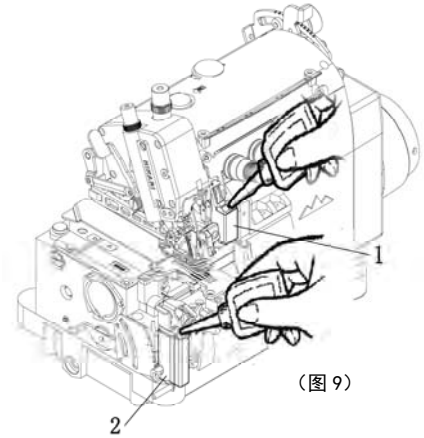

（图 9）

➢ **机油的更换**

注意

更换油时，请专业技术人员进行操作。

缝纫机在开始使用 1 个月后更换一次机油，然后请 6 个月更换一次机油。如果不更换机油继续使用，缝纫机有可能发生故障。

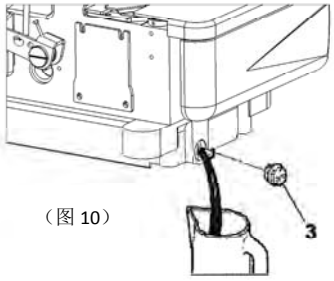

（图 10）

➢ **排油的方法**

1. 请卸开油箱底座排油孔螺丝 3，排出旧油。
2. 排完油后，将排油孔螺丝 3 拧紧。（图 10）

➢ **检修和更换过滤器**

注意

检修和更换过滤器时，务必将缝纫机的电源关掉，将插头从电源插销上拔下来之后，请专业技术人员进行操作。

当过滤器 4 有赃物等堵塞时，就不能正常给油。请每 6 个月拆卸过滤器 4，进行清扫或更换。

过滤器的拆卸方法（图 11）

请参考图，拆下 4～5 后，检查过滤器。当发现过滤器 4 伤痕严重无法使用时，请更换新的过滤器。

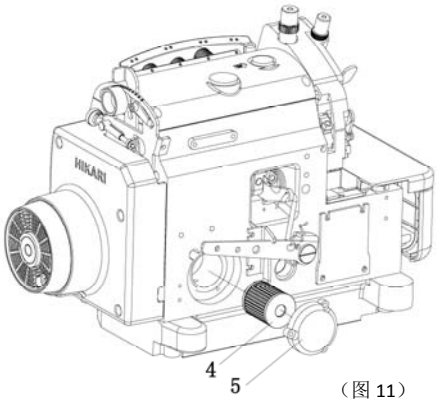

（图 11）

➢ **缝纫机的清扫**

注意

在清扫缝纫机时，务必将缝纫机的电源关掉，将插头从电源插销上拔下来之后再进行。

请打扫针板的空槽和送布牙周围。（图 12）

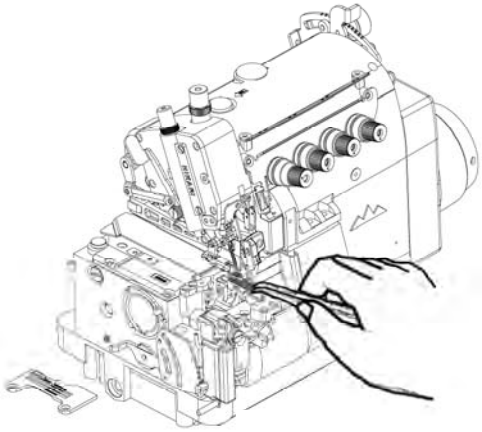
（图 12）

➢ **穿线的方法**

注意

在进行穿线时，务必将缝纫机的电源关掉，将插头从电源插销上拔下来之后再进行。

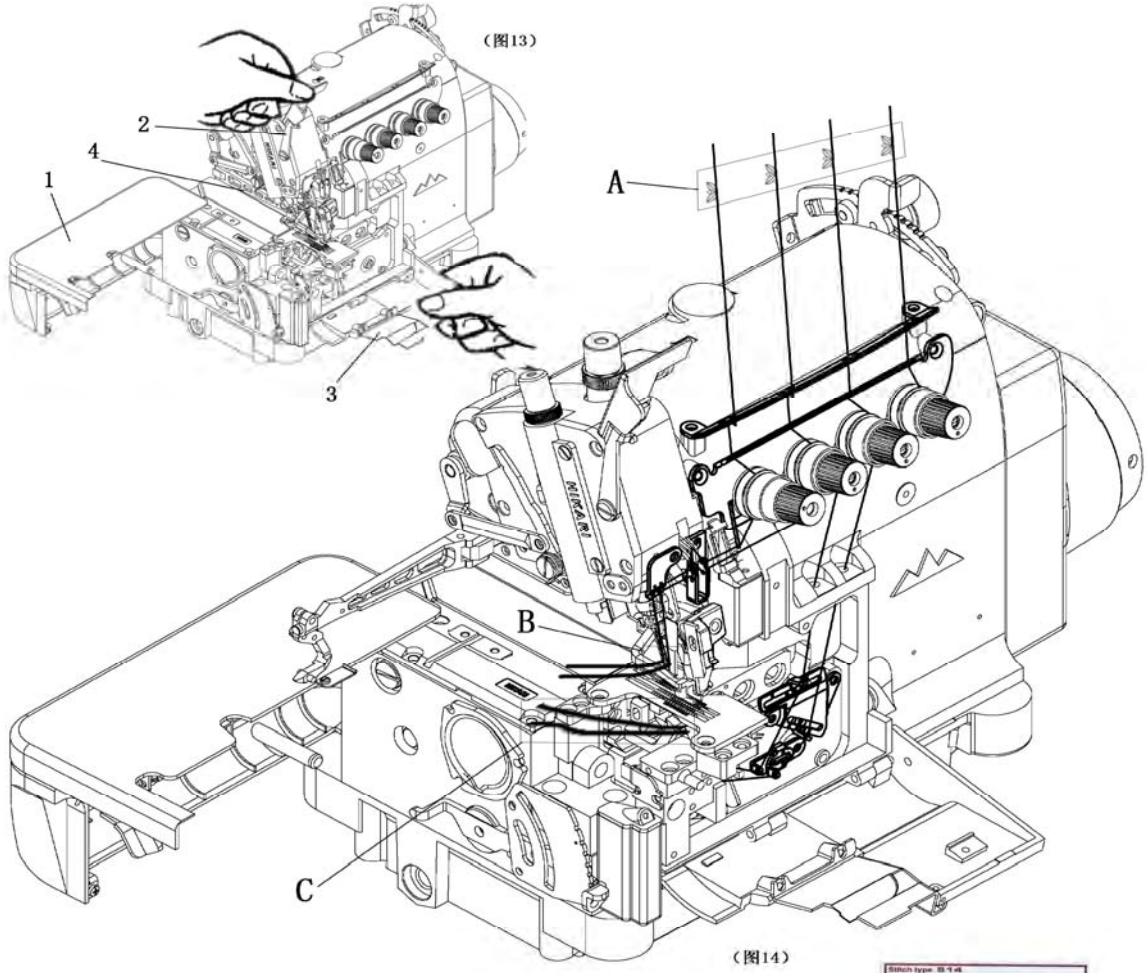

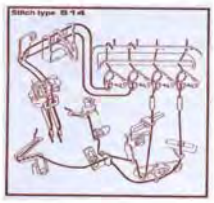

1. 请打开大盖 1、护眼罩 2、前罩 3、抬压脚臂 4。穿过线以后，请恢复到原来的位置。（图 13）
2. 如果已穿好线时（图 14）

A 部：请将已穿好的线与缝纫机用线连接起来。

B 部：针线

把线的接头拉到针的跟前，先将接头剪掉，再将线穿过针。

C 部：弯针线、链弯针线

可一直将连接的接头穿好后，再用剪刀剪掉线头整好。

3. 当缝纫机上没有线时看着贴在缝纫机上的穿线图，将线穿过去。

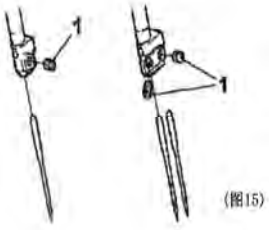

➢ **机针的更换**

注意

在更换机针时，务必将缝纫机的电源关掉，
将插头从电源插销上拔下来之后再进行。
请松动螺丝 1（但不能拔出螺丝），更换针。（图 15,16）
安装时，将针的凹槽部朝向正后方，插入针箍的针孔中于最底端，拧紧螺丝 1。（图 17）

(图 17)

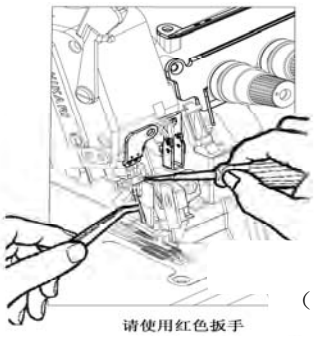

（图 16）

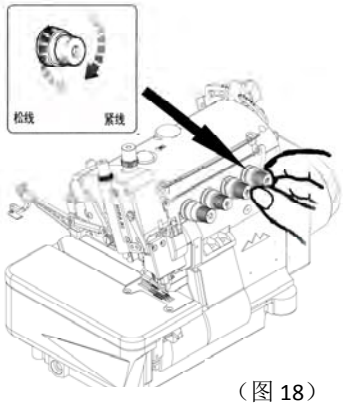

（图 18）

➢ **线状态的调节**

线状态的调节请用针线调节旋钮、上弯针线调节旋钮和下弯针线调节旋钮进行调节。（图 18）
想将线拉紧一些时，可将各旋钮向右旋转，想松一些时可向左旋转。
在能取得均匀且漂亮缝纫效果的情况下，尽量采用较松的夹线状态。

➢ **压脚的开和关**

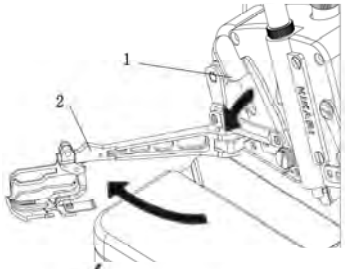

（图 19）

注意

开和关压脚时，务必将缝纫机的电源关掉，将插头从电源插销上拔下来之后再进行。
打开压脚时，（图 19）
1. 旋转手轮，将针置于最上边位置。
2. 压下压脚开关把手 1，打开抬压脚臂 2。

合上压脚时，（图 19）
1. 旋转手轮，将针置于最上边位置。
2. 压下压脚开关把手 1，将抬压脚臂 2 返回到原来的位置。

➢ **压脚压力的调节**

压脚的压力在送布能正确的进行，并且能缝出稳定针脚的范围内，请尽量使用较小的压力为宜。
旋转调节螺丝 3，调节压脚的压力。（图 20）

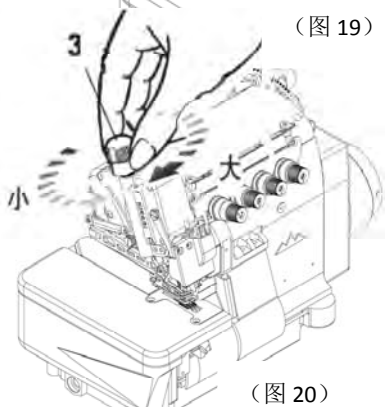

（图 20）

➢ **差动比的调节**

1. 松动螺母 4，将把手 5 压下时差动比变大，缝好的布料会收缩。抬起把手 5 时，差动比变小，缝好的布料会伸长。
2.调节结束后，请拧紧螺母 4。（图 21）

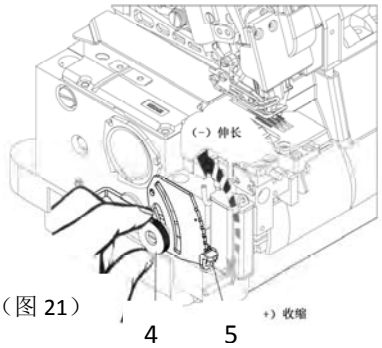

（图 21）

➢ **上送布牙压力的调节**

当上送布牙能够进行正常送布运动时，并且能缝出稳定针脚的情况下，尽量使用较小的压力为宜。旋转调节螺丝 A，如右图示方向调节上送布牙的压力。(图 22-1)

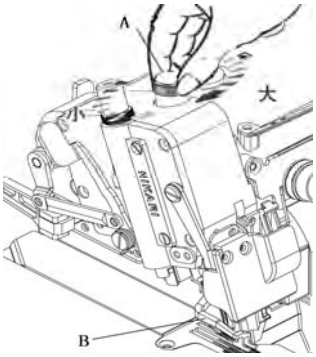

（图 22-1）

➢ **上送布牙前后方向的调节**

逆时针方向拧松调节螺母 1，推动调节杠杆 2 如图示方向进行调节操作，实现完成上送布牙前后方向的调节。
（图 22-2）

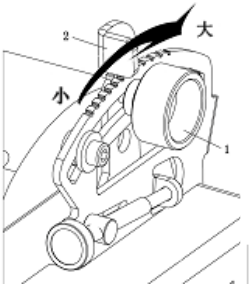

（图 22-2）

➢ **上送布牙上下方向的调节**

使用一字型的螺丝刀拧松螺钉 1 进行调节上送牙上下方向的调节，调节高度如图示方向。（图 22-3）

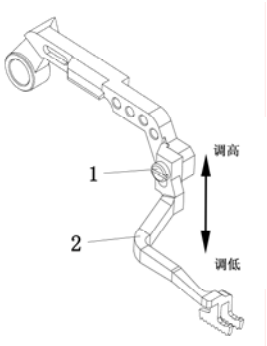

（图 22-3）

➢ **针脚长度的调节**

⚠ 注意

在调节针脚长度时，务必将缝纫机的电源关掉，将插头从电源插销上拔下来之后再进行。

1. 一边按着按钮 1，一边旋转手轮 2，将按钮置于更深的状态。（图 23）
2. 顺时针方向旋转手轮，针距变大；逆时针方向旋转手轮，针距变小。

注

缝纫针脚长度的调节，请务必在调节差动比之后进行。

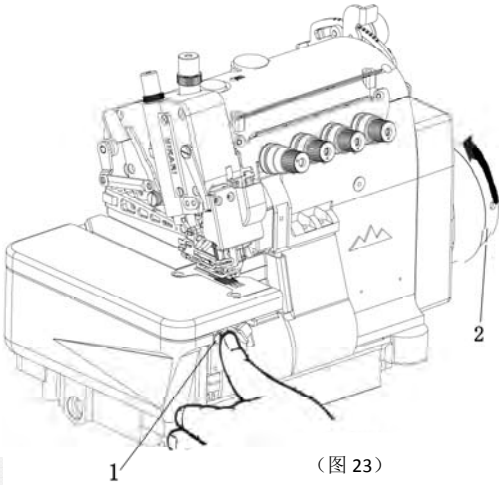

（图 23）

注意

调节刀片时，务必将缝纫机的电源关掉，将插头从电源插销上拔下来之后，请专门的技术人员进行操作。

刀片的刃部有划破手指的危险，操作时要特别小心注意。

➢ 上刀的更换

1. 请松动螺丝 1，使下刀架 2 靠向最左边位置，使用螺丝 1 临时固定。
2. 请拔出螺丝 3，拆掉上刀 4。用螺丝 3 临时固定新的上刀，旋转手轮，将上刀架置于最下边位置，上下移动上刀进行调节，使上刀和下刀相互咬合 0.5～1.0mm 的深度，拧紧螺丝 3。
3. 将上刀 4 的刀中央（A）点对准与下刀 6 的刀中央部相交叉的位置（请参照图 26），松动螺丝 1，确认上刀和下刀没有间隙之后，拧紧螺丝 1。
4. 在上下刀之间放入线，旋转手轮，确认可以顺利切断线。

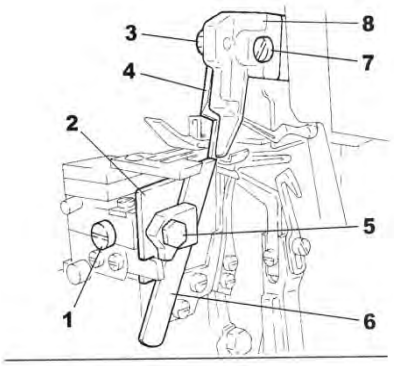

(图 24)

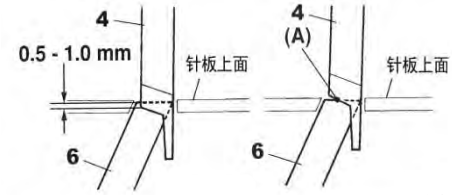

(图25) (图 26)

➢ 下刀的更换

1. 松动螺丝 1，将下刀架 2 置于最左边位置，用螺丝 1 临时固定。
2. 松动螺丝 5，取出下刀 6，更换新的下刀。调节下刀，使下刀的刀刃与针板上面的间隙尺寸为 0～0.3mm，拧紧螺丝 5。
3. 根据更换上刀的项目 3.～4. 进行操作。

(图 27)

➢ 链幅的调节

1. 松动螺丝 1，将下刀架 2 置于最左边位置，用螺丝 1 临时固定。
2. 松动螺丝 7，左右移动上刀座 8，调节链幅。
3. 根据更换上刀的项目 3.～4. 进行操作。

➢ 刀的研磨方法

上刀的材质为超硬合金，可在很长时间内不需要研磨。刀的切断变钝时，请研磨下刀。

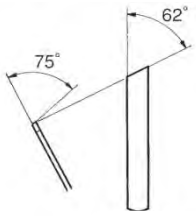

(图 28)

下刀的研磨方法（图 28）

请参照图示正确地进行研磨。

研磨方法不对时会使刀变钝，不能很快切断，请予注意。

上刀

研磨上刀时，需要使用特殊的研磨机，最好由购买特约店委托我公司代为研磨。为了提高作业效率，请准备好备用上刀。

➢ 针打线片的标准安装位置和调节

注意

调节针打线片时，务必将缝纫机的电源关掉，将插头从电源插销上拔下来之后，请专业技术人员进行操作。

转动手轮当针打线片 1 处于最下方的位置时，请调节上节头部前面到针打线片的尺寸。进行调节时，请松动螺丝 2 进行调节。（图 29、30）

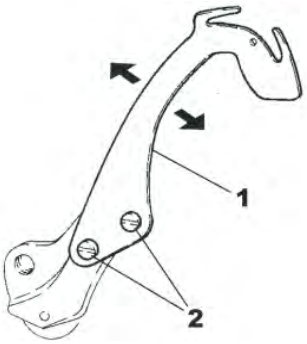

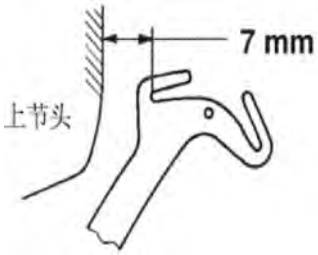

(图 29)

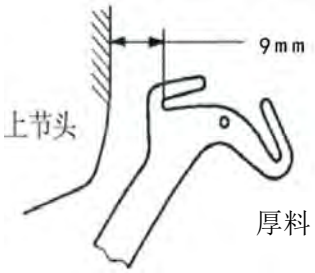

(图 30)

➢ 针过线件的标准安装位置和调节

针过线件的安装位置因缝纫机的型号而异，以针打线片处于最下方位置和最上方位置时为标准，将各针过线件安装到符合其型号的位置处。

针过线件调节标准（图 31）

松动螺丝 12 和 14，沿箭头方向移动针过线件和针过线件托架 13 进行调节。

向图中符号（+）的方向调节时，线的抽出量增多，向符号（-）的方向调节时，线的抽出量减小。调节后，

请拧紧螺丝 12 和 14。

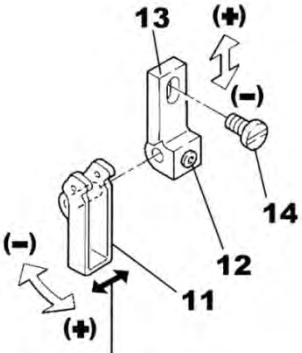

(图 31)

调节过线件 11 的左右位置，使针打线片处于双股部分的中心。

HXT6814T

针过线件的标准安装位置(图 32)

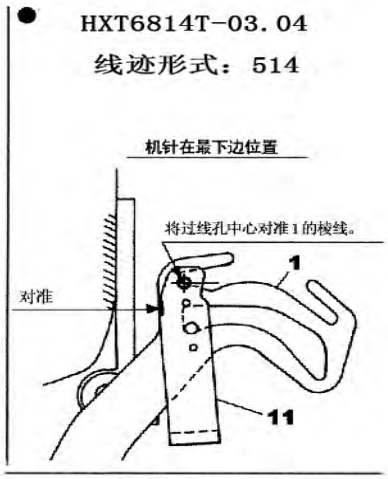

(图 32)

➢ **弯针打线片和过线件的标准安装位置与打线凸轮打线量的调节**

注意

调节打线凸轮时，务必将缝纫机的电源关掉，将插头从电源插销上拔下来之后，请专业技术人员进行操作。

1. 弯针打线片 9 和 11 用下弯针最右边位置调节。各自的标准安装位置如下图示。
   参与图示，请松动螺丝 10 和 12，调节弯针打线片 9 和 11。
   将弯针打线片 19 和 11 调节到图中（+）符号的方向时，打线量变大；调节到（-）符号的方向时，打线量变小。
2. 弯针过线件 13、15、17 的标准安装位置如下图所示。
   参考图，请松动螺丝 14、16 和 18，调节各弯着针过线件。
   将各弯针过线件向图中的（+）符号调节时，线的打出量增多，向（-）符号调节时，线的打出量减小。（图 33）

弯针打线片和过线件的标准安装位置（图 34）

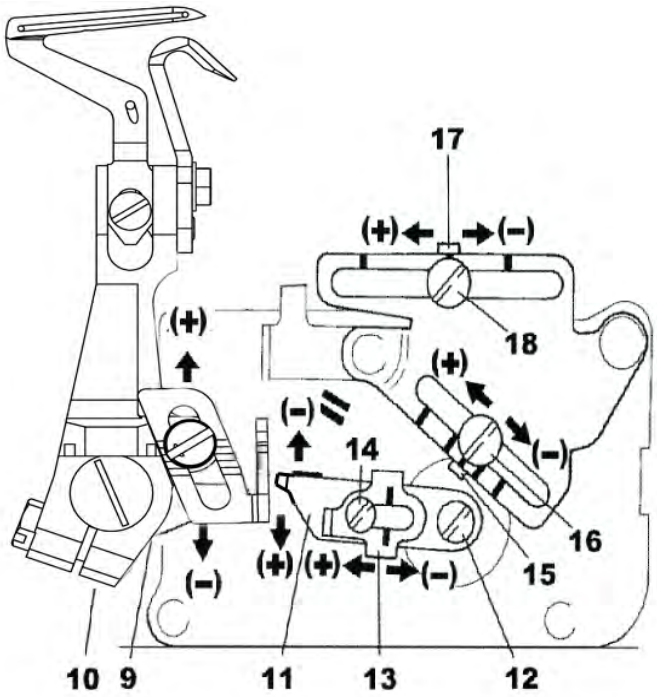

(图 33)

下弯针最右边位置

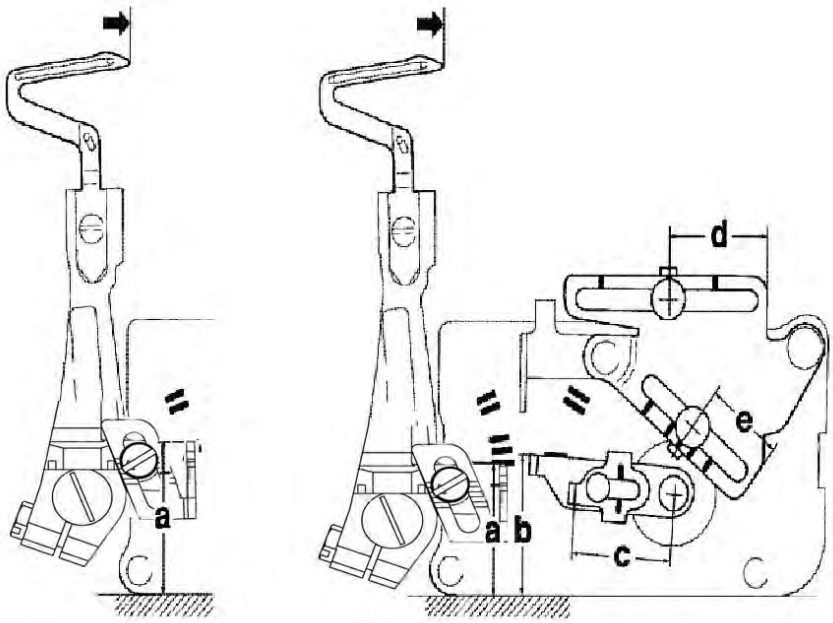

（图 34）

HXT6800T	(a)	(b)	(c)	(d)	(e)
HXT6814T-04	30	29	20	33.5	10.5

(mm)

HXT6800T	(a)	(b)	(c)	(d)	(e)
HXT6814T-03	26	29	28	21.5	14.5

(mm)

调节基准表

(mm)

子型号			(a)	(b)	(c)	(a)	(b)				
HXT6814T-03	10.5	3.8	13.5	5.5	10.5	0.5	0.2	0.7-0.9	5.5	1-6	4.5
HXT6814T-04	11.9	4.2	13.5	5.5	11	0.5	0.2	0.7-0.9	6	1-8	5.5

标准用针

子型号	DC×27
HXT6814T-03	#11
HXT6814T-04	#11

HX系列子型号规格表

Application 用 途	布料厚度	子型号	针数(根)	线数(根)	针距(mm)	锚幅(mm)	线迹长(mm)	差动比	压脚抬升量 (mm)	最高旋转数 (r.p.m.)
一般缝纫	中厚-厚	HXT6814T-03	2	4	2	4	0.6 - 3.8	0.7 - 2	5.5	6,700
	厚-特厚	HXT6814T-04	2	4	2	4	0.8-5	0.7 - 2	6	6,300

Safety attention

1. When using the machine, please strictly observe the safety measures as the following items.

2. Before using the machine, please read all instructions contained in the instruction manual. Please proper keep the manual so as to consult at anytime .

3. When using this machine, make sure that all the safety devices are installed to the required location. Forbid to use the machine if the safety devices are not in the right position.

4. The machine shall be operated by the trained operator.

5. When using the machine, safety glasses are recommended.

6. Please turn off the power or unplug the power plug when the following cases happen.

6-1 When threading for needle ,looper, separator ,or replace hook .

6-2 When change needle ,presser foot ,needle plate ,looper , separator ,feeding dog , needle guide ,stand ,cloth guideway device .

6-3 When repair

6-4 Nobody in the working site ,or leave working site

7. In case of The oil, lubrication grease used in the machine and the peripheral device flow into eyes or skin, or be drunk mistakenly, please wash and go to hospital.

8. Prohibit to touch the power on/off accessory and devices of the machine with oil hand .

9. The repair, alteration, adjustment about the machine should be carried out by professional staff.

10. General repair and maintenance of the machine should be carried out by trained staff.

11.Repair and maintenance about electrical aspects of the machine should be done by professional staff or experts.

12. When repairing, preserving the accessory about the air, compressed air cylinder , the air compressor to supply source should be cut off.

13. The sewing machines should be regular cleaned while using.

14.The machine should be connected to ground wire for safe operation. It should be used against strong noise such an high-frequency welding machine.

15. Electrical power plug should be installed by trained staff. Power plug must be connected to the grounding receptacle

16. Sewing machine can not be used other than the designated purpose.

17. Alteration and modification of the machine should be accorded to safety requirements and effective safety measures should be taken. In addition, we assume no responsibility for alteration and modification.

18. The instructions using the following two warning signs.

Dangerous to operators, maintenance staff.

Special attention needed for safety.

Precautions for safety use of the machine

Dangerous

1. **To prevent electric shock, please do not open the shell of the control box or touch the control box parts when power on.**

caution

1. Please do not operate the machine when the safety devices ,such as, belt cover, eye protective cover are unload ,to prevent personal injury.

2. To prevent operator being rolled into machine to cause life accidents , please use those motor with motor protection cover .

3. Please do not operate the machine when the power ground wire is took away ,to avoid electric shock.

4. To prevent operator to be rolled into machine to cause life accidents , please do not put your fingers, hair, clothes near the belt pulley when the machine is running , and do not put anything above the machine.

5. To prevent personal injury, please don't let your fingers near to cloth cutting and needle after turning on the power or the machine in operation.

6. To prevent personal injury, when the machine is in operation, do not put your finger in the eye shield.

7.To prevent electric shock, electric leakage, fire accident, be sure to turn off the power of the sewing machine before unplug or insert the power plug with your hand.

8. To prevent personal injury due to sudden starts, be sure to turn off the power when leaving the machine.

9. To prevent personal injury due to machine sudden starts, turn off the power after a power outage.

10. In order to prevent personal injury due to machine sudden start, when disassembling motor shield, be sure to turn off the power and the foot pedal is firmly fixed.

11. To prevent personal injury due to sudden starts, when repair, adjusting, removing, threading, replacing stitch, be sure to turn off the power , and the foot pedal is firmly fixed.

12.To prevent personal injury due to falling the machine, please do not hand carry shield cover when sewing machine. Take shield cover off, the shield will open, this will result in the falling of the machine.

Sectors

1. Preface·····5
2. Warning label ·····5
3. Safety measures
- Using environment ·····6
- Safety measures ·····6

4.Attentions matters in the operation
- Open carton·····7
- Transportation·····8
- Installation .preparation·····8
- Using sewing machine oil ·····9
- Before use machine·····9
- During use machine ·····9
- Maintenance ,inspection ,repair ·····10

5.Location of warning label and safety protection device ·····11
6. Safety protection device
- Eye guard board ·····12
- Finger protection support·····12
- Presser foot ·····12
- Front protection cover·····12
- Big cover ·····12

7. Common problem in daily operation
- Table drawing ·····13
- About oil supply ·····14
- Supply oil for HR device ·····15
- Machine oil change ·····15
- Oil extraction method ·····15
- Maintenance and replace filter ·····15
- Clean sewing machine ·····15
- Method of threading·····16
- Replace needle ·····16
- Adjust thread tension ·····17
- Open/close presser foot ·····17
- Adjust presser foot pressure·····17
- Adjust different feeding ratio ·····17
- Adjust up feeding teeth pressure·····18
- Adjust up feeding teeth front and back location·····18
- Adjust up feeding teeth up-down location ·····18
- Stitch length adjustment ·····18
- Replace of upper knife·····19
- Replace of down knife ·····19
- Adjust the overedge width ·····19
- Method of grind knife ·····19

- Standard installation and adjustment of needle thread bond piece ·····20
- Standard install location and adjustment of needle thread line piece·····20
- Standard installation position of looper thread bond piece and thread line piece and adjustment of thread bond camshaft thread bond ·····21
- Adjustment standard table ·····22
- Standard needle table ·····22
- HX series sub model specification table ·····22

1. preface

- **This instruction manual describes how to use our products safely.**
- **Read this instruction manual and learn very carefully how to operate, adjust and service this sewing machine before beginning any of the procedures.**

2. Warning label

To prevent accidents and ensure safety, warning indications which show the degree of danger are used on our products and in this manual.
Follow all warnings and instructions. Indication labels should be found easily. Attach new labels when they are stained or removed. Contact our sales department when new labels are needed.

Symbols, signs and/or signal words which attract users`attention

DANGER	Indicates an immediate hazard to life or limb.
WARNING	Indicates a potential hazard to life or limb.
CAUTION	Indicates a possible mistake that could result in injury or damage

Symbols and messages

	Be sure to follow the instructions when operate the machine.
	It`s dangerous to get an electrical shock.
	It`s dangerous to injure your hands or fingers.
	Indicates a danger of burn injury due to high temperature.
	Never do this.
	Shut off the power when checking, adjusting and repairing the machine or when lightning may strike.
	Be sure to ground the machine and labor saying device securely.
→	Denotes the normal rotating direction of the machine pully.

3. Safety measures

➢ **Using environment**

The environment in which our industrial sewing machines are used may seriously affect their lives, functions,performance and/or safety.

For safety protection , please don't use machine in the following environment

1. Do not use the machine near objects which make noise such as a high-frequency welder, etc.
2. Do not use or store the machine in the air which has vapor from chemicals, or do not expose the device tochemicals.
3. Do not leave the machine outside, in high temperatures or the direct sun.
4. Do not use the machine in the places of high ambient temperature and humidity that seriously affects sewing machines.
5. Do not use the machine on the condition that the voltage fluctuation range is more than ±10％ of the rated voltage.
6. Do not use the machine in the place where the supply voltage specified for the control motor cannot be properly obtained.

➢ **Safety measures**

（1） Safety protection during maintenance and examine of machines

- Always turn off the power unplug the machine and then make sure that the machine does not run by pressing the treadle before performing any maintenance, such as checking, repairing, cleaning, etc. However, if you need to perform these procedures with the power on, to prevent accidents due to the unexpected start of the machine and users` misoperation, establish your own procedures for safely and follow them.
- Always turn off the power and unplug the machine before performing the procedures shown below.
  - Add oil
  - Threading
  - Clean sewing machine
  - Change needle
  - Clean and replace the oil supply component
  - Change machine oil
- Please turn off the power switch before the following action
  - Adjust stitch
  - Adjust different stitch ratio
- Only well-trained people should perform routine daily maintenance and/or repair the machine。

- Do not modify the machine yourself.

※Consult your local Hikari sales office or representative for modification.

（2）**Before operating the machine**

- Check the machine head and unit for any damage and/or faulty function at the start of each day. If there should be something wrong with the machine, immediately perform repair and/or other necessary procedures
- Make sure the thimble is fixed well
  ※Be care of the needle point

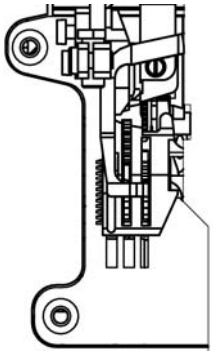

(Fig.1)

- Before starting the machine, make sure that the presser foot is positioned correctly(turn the machine pulley slowly by hand to see if the needle point is centered in the needle drop hole on the presser)(Fig.1)
- Check to see if the presser foot is secured(raise the presser foot by the foot lifter and press it by hand front to back and left to right)(Fig.2)

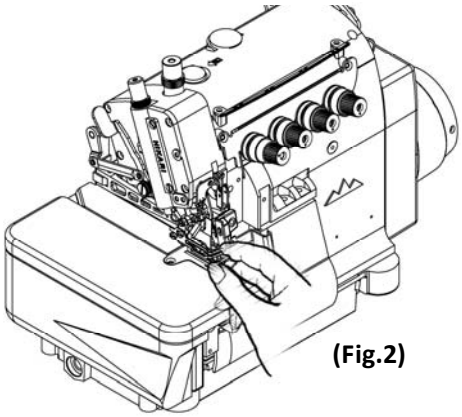

(Fig.2)

（3）**Training**

- To prevent accidents，operators and service/maintenance personnel should have proper knowledge and skills for sate operation.

To ensure so, managers must design and conduct training for these people.

4. All attention matters in following operation

➢ **Open carton**

1. The machine is packaged in a cardboard box before shipping. Unpack your machine in orderly sequence while checking them right-side up by referring to the indications, such as logo, etc. printed on the boxes.
2. When take off the machine head from the cushion packing material , don't bring up those parts of machine needle or thread line device , or will happen dangerous or damage machine.
3. When take off machine head , please take care of the centrybaric position , be careful to take off .
4. Keep the cardboard box and packing carefully in case secondary transport is needed in the future.

Disposal of the packaging

- The packaging material of the machine consists of wood, paper, cardboard and VCE fiber. The proper disposal of the packaging is the responsibility of the customer.

Disposal of machine waste

1. Customer take responsibility to dispose sewing machine waste
2. Some material like steel , aluminum ,zinc etc which used to make sewing machine
3. The disposal of sewing machine waste should obey the rule of local environmental protection department .in necessity ,please ask help from special factory to dispose these waste .

※For some oiled parts ,please make disposal according to the regulation of local environmental protection .

warning

➢ **transportation**

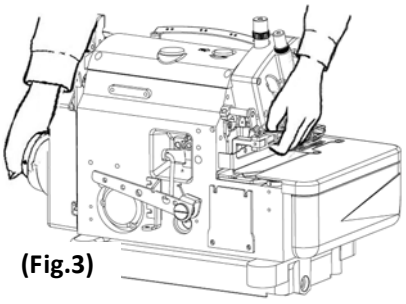

(Fig.3)

1. Need two above person to carry sewing machinehead .moreover , only sewing machine table can be carried by small trolley by people.
2. When move machine head , use right hand to hold the handwheel and motor cover , use left hand hold machine head ,to lift up with smoothly and fasten . (Fig.3) When sewing machine is stained with oil ,it is easy to slip from hand to be broken when carry it ,please clean well the oil before carry machine .
3. When carry machine table or carry machine by small trolley ,please note that don't powerful strike or shock ,so as to avoid sewing machine slope to cause danger .
4. If need re-transport sewing machine and make packing , please clean oil from machine head . otherwise ,the machine will slip away to broken machine head or the oil will deteriorate the packing material .

warning

➢ **Install and preparation**

sewing machine table

1. Please use those machine table which can hard enough to bear the weight of sewing machinne head and the reactive force when carry machine .(table ,brandrich)
2. Please sufficient in consider the brightness of sewing machine parts and operation light ,put machine in easy-operation environment .if the brightness is not enough , please install lamp accoring to requirement .
3. When operate sewing machine , in order to avoid accident caused by slide foot from pedal ,so must install anti-skiding mat on the pedal .
4. According to the operator'pose , adjust the height of table (working status height)

warning

Wiring

1. Please check up the wire plug which connect machine head and motor .
   Use wire to connect sewing machine head ad motor ,make sure the power is off .
2. Don't put strong force when wiring .
3. ⃠ Don't overbending wire .
4. Close to the connection wire from moving parts , keep at least 25mm away to install .
5. In necessity , consider the connection location or put protection cover to protecte the connection wire .
6. ⃠ Don't use pin when connect wirs .

warning

Grounding

1. Each special ground wire is used for each sewing machine only , can not used for other sewing machine .
2. Correctly install ground wire in the right place of machine head .

Warning

➢ **Use sewing machine oil**

1. Don't operate machine before inject oil to the oil tray .pls use the exclusive lubricate oil for sewing machine .(equivalent ISO viscosity grade VG22)
2. Please wear protective glasses to avoid the machine oil enter into eyes and cause eye inflammation .

※In case ,the oil enter into eyes, please use water to wash at 15 minutes ,and go to doctor .

3. If skin touch machine oil , please use water and soap to wash immediately .
4. Never allow machine oil enter into mouth .
5. Please keep the machine oil away from the place that kids can reach . in case the oil enter into mouth ,don't emesis , ask for doctor immediately .
6. Please correctly dispose the waste oil ,container according to the disposal measures from environmental protection law .if don't know the law ,pls contact the local agent ,and then make disposal .
7. In order to prevent dusty ,moisture from mix in ,please fasten down the oil tank cover to store oil after work , put in the shade place to keep .

Warning

➢ **Attention matters before operate sewing machine**

Sewing machine table

1. Please make sure the connection wire or wire contact without damage ,shed ,lossen before power on .
2. Don't put hands around machine needle or trimmer when power on .
3. The operator must had been trained and full understand this book and operation manual before they operate machine .
4. Must familiar and understand the dangerous and warning labels , when necessary , should make safety education toward the operators .
5. In the beginning use of the first month ,should reduce the operation speed . please use the three fourth of the max speed .

Warning

➢ attention matters when operating sewing machine .

1. After take off the eyeshield board ,fingershield support ,transmission cover , don't operate sewing machine .
2. Sewing machine is running is very dangerous , don't put hands under machine needle .
3. Sewing machine is running is very dangerous , make sure don't let finger ,hair ,cloth close to needle bar and automatic trimmer device .
4. When don't use sewing machine or leave sewing machine , please power off .
5. When power cut , please turn off power .
6. When operate sewing machine , don't wear some cloth which is easy to be rolling into machines .
7. When machine is running , don't put tools or some irrelevant items on machine table .

Note

➢ **maintenance ,inspection ,repair**

1. The work of maintenance ,inspection ,repair need some one who is gained special training and full understand this book and operation manual .
2. Please turn off power before lay down machine head to maintain ,check up ,repair sewing machine , unplug the power plug from socket , and make sure to operate sewing machine only in the condition that even use foot to press pedal ,the machine can not running .
3. For routing inspection and regular inspection toward sewing machine head ,please according to the instruction of operation manual .
4. Please use the original parts to repair and change parts , our company will not take responsibility for accidents which caused by improper repair or use fake and poor quality parts.
5. Don't modify sewing machine according to customer' judgment, otherwise our company don't take responsibility for accidents caused by this .
6. For the purpose of temporary repair ,adjustment to disassemble safety device ,safety protective shield , after work, please reinstall according to the original state .
7. After finish work of maintain ,inspection and repair sewing machine , please check-up whether it is safe after switch-on power .

5.The position of warning label and safety protective device

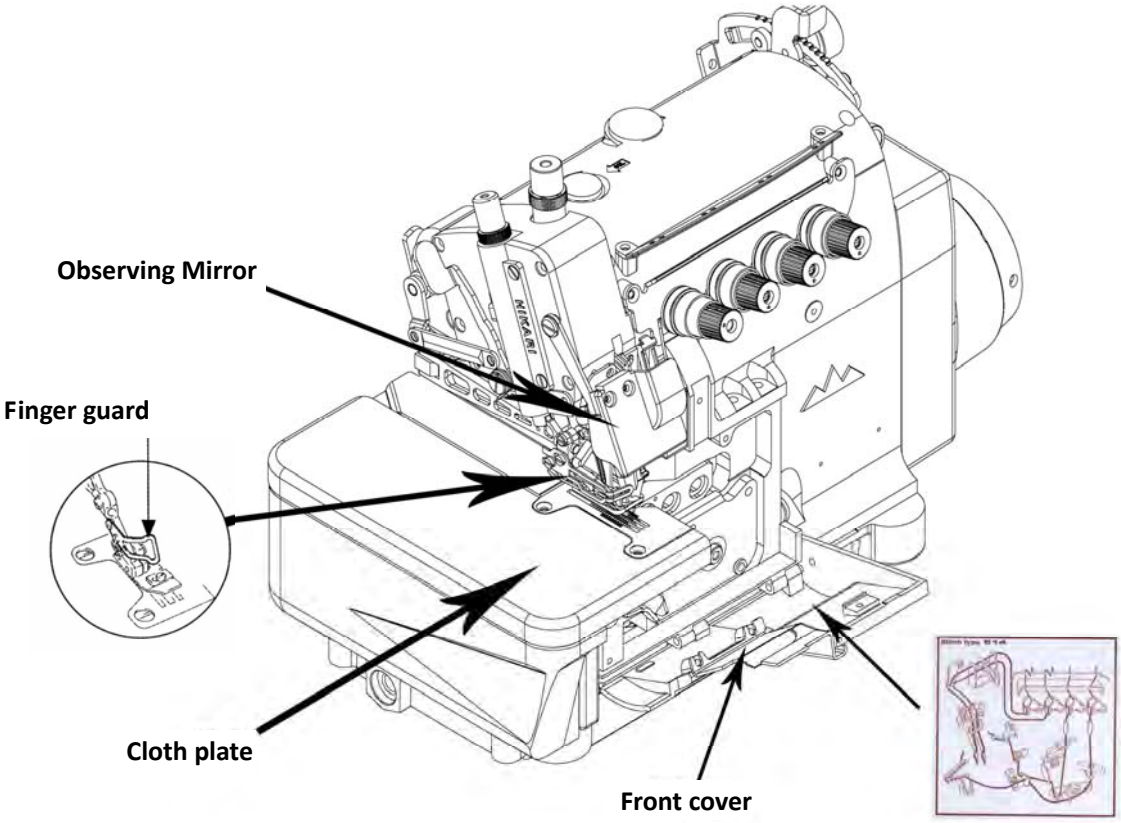

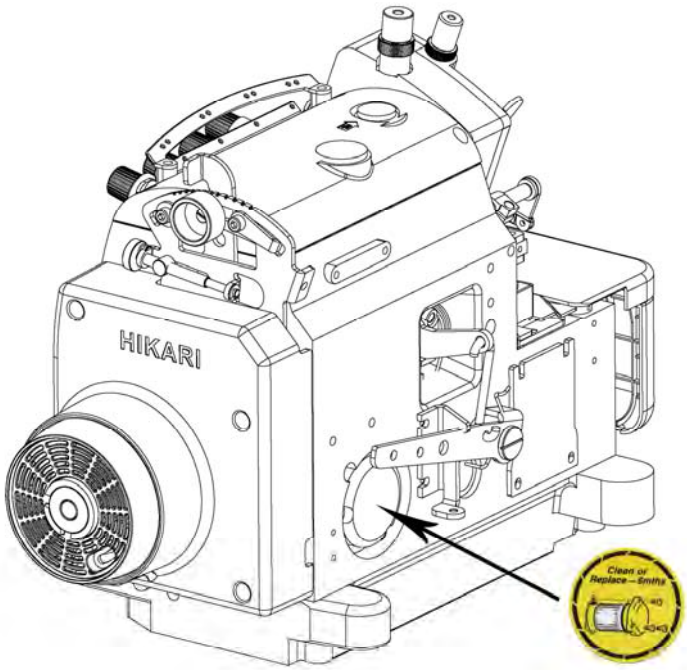

(Fig.4)

6. Safety protective device

This program is composed to let you know all the safety protective device , and record all the attention matters .

Note

Safety protective device

➢ **Eye shield board**

Don't open

For the eye safety purpose , don't open the eye shield board when operate sewing machine . eye shield board is the eye shield cover which can avoid the broken needle fly into eyes .

➢ **Finger protective support**

Don't stretch hands into

In order to avoid the danger that operator contact the up-down moving needle , install finger protective support around needle . but , above the finger protective support reserve space to convenient threading , if stretch finger into the space , there may be the danger that needle spur into finger .

➢ **Presser foot**

Don't stretch hands into

The distance from surface of needle plate and presser foot is above 5mm , there have danger of clamp finger in this space .when use knee contact to lift presser foot or use foot press pedal for automatic presser foot lift , don't stretch finger to the presser foot .

➢ **Front protective cover**

Don't stretch hands into

Look from front side of sewing machine ,the looper is moving in the circular motion . in order to avoid the looper contact operator , must operate sewing machine on the condition that the front cover is closed .

➢ **big cover**

Don't open

When mahine is running , in order to avoid the looper thread routing camshaft to contact with looper , please close the big cover .

7.General matters in daily operation

➢ **drawing of table**

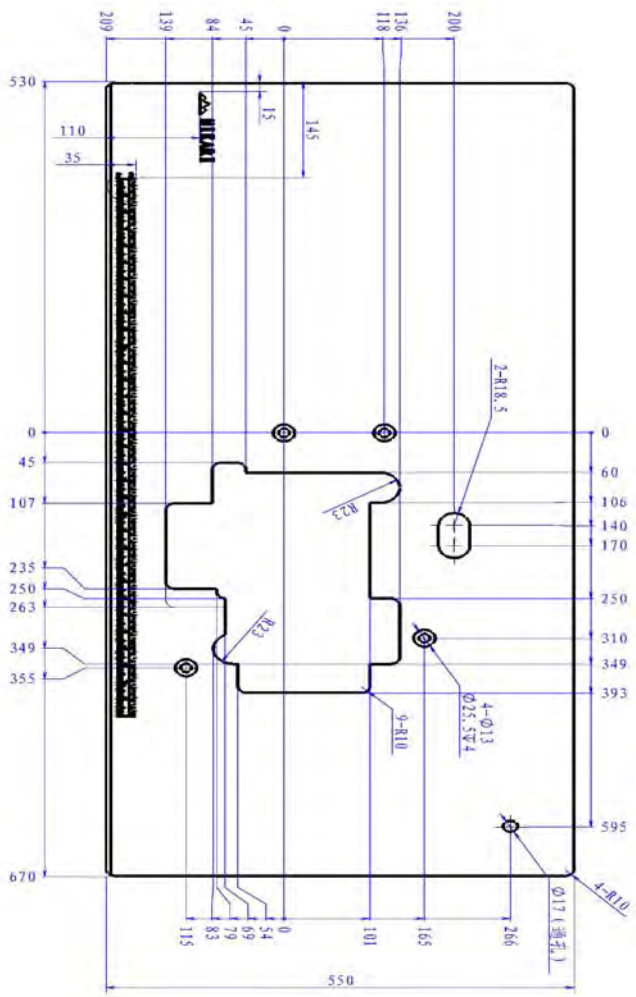

(Fig.5)

➢ **regarding oil supply**

note

When add or change machine oil , please use the oil supplied by our company . if use oil from other company , may damage sewing machine .

1. oil category

Use we supplied "HIGH SPEED SEWING MACHINE OIL "(high speed low viscosity lubrication oil)(ISO viscosity/VG22)

2. the method of supply(Fig.6)

Open the cover of oil supply mouth, add oil to the oil level between oil scale H and L .after adding oil ,cover the oil supply mouth .

3. The required amount of oil (Fig.6)

The H line and L line of The oil scale 2 marks the maximum oil amount and minimum oil amount .

In order to normally keep oil amunt between H line and L line , please often check and add oil .

4. Use hand to add oil (Fig.7)

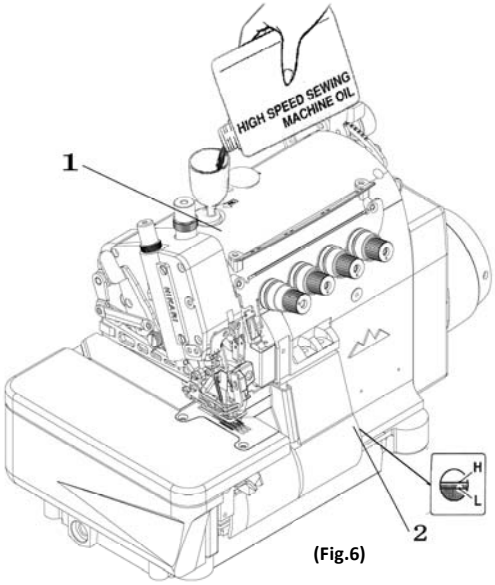

(Fig.6)

note

Before add oil by hands , please turn off the power ,and unplug the plug from socket

It is the first time to use sewing machine , or it is a period of time to use sewing machine again , please use oil supply bottle to add 2-3 drip of oil to the needle bar 3 and upper looper 4.

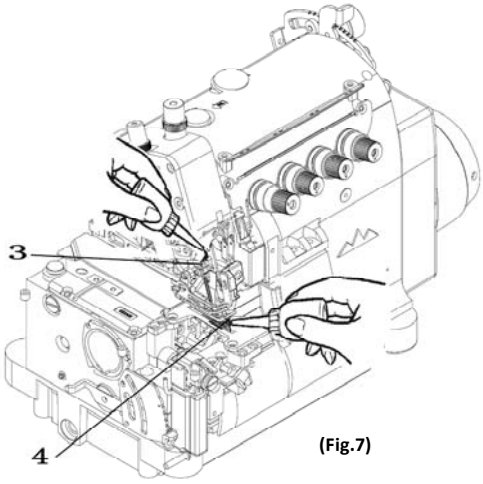

(Fig.7)

5. check the machine oil circulation condition (Fig.8)

After add oil , press the sewing machine pedal , make machine running , check the oil circulation by oil windown 5.

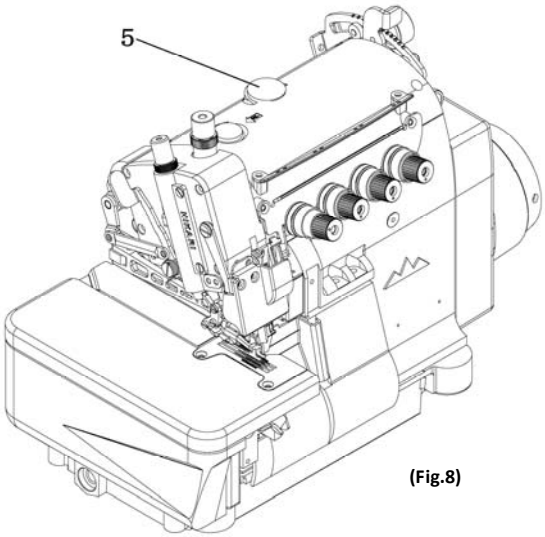

(Fig.8)

➢ **supply oil for HR device**

note

Before supply oil for HR device , please turn off the power , unplug the plug from socket .
often check and supplement silicone for the silicone oil box 1 and 2 ,to avoid the thread broken caused by the neele in lack of silicone oil . (Fig.9)

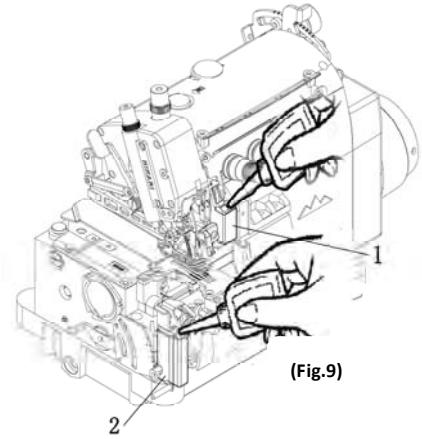

(Fig.9)

➢ **change machne oil**

note

Need professional technician to change oil .
Sewing machine need change oil after one month in the first using ,after please change oil every six month . if don't change oil , the sewing machine may break down .

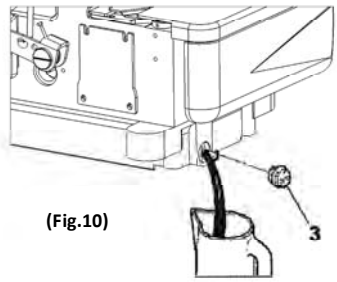

(Fig.10)

➢ **the method of oil extraction**

1. Please unscrew the screw 3 of the oil extraction hole on the oil tank base ,drain out the old oil .
2. After oil extraction , please fasten the screw 3. (Fig.10)

➢ **maintenance and change filter**

note

When maintenance and change filter ,please turn off the power ,unplug the plug from socket , require professional technician to operate .
When the filter is block by wate material , the filter would not normally work . please Disassemble the filter 4 , make clean and change .
To renmove the filter(Fig.11)
Please refer the drawing , after disassemble 4-5,
Check the filter . when find the fiter have badly scar ,
please change the filter .

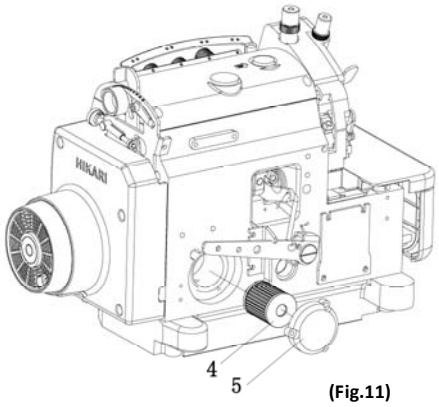

(Fig.11)

➢ **clean the sewing machine**

note

Before clean the sewing machine , pleae turn off the power , unplug the plug from socket .
Please clean the empty slot of the needle plate and feed dog . (Fig.12)

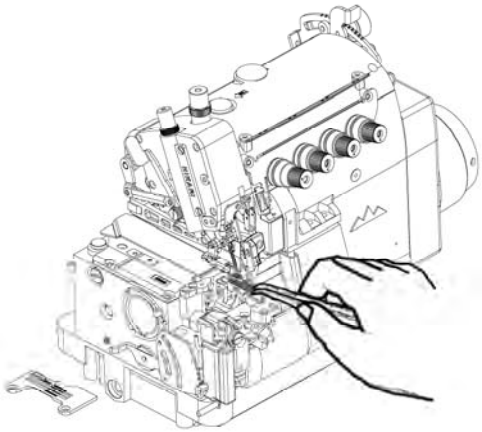
(Fig.12)

➢ method of threading

note

Before threading , please turn off the power ,and unplug the plug from socket .

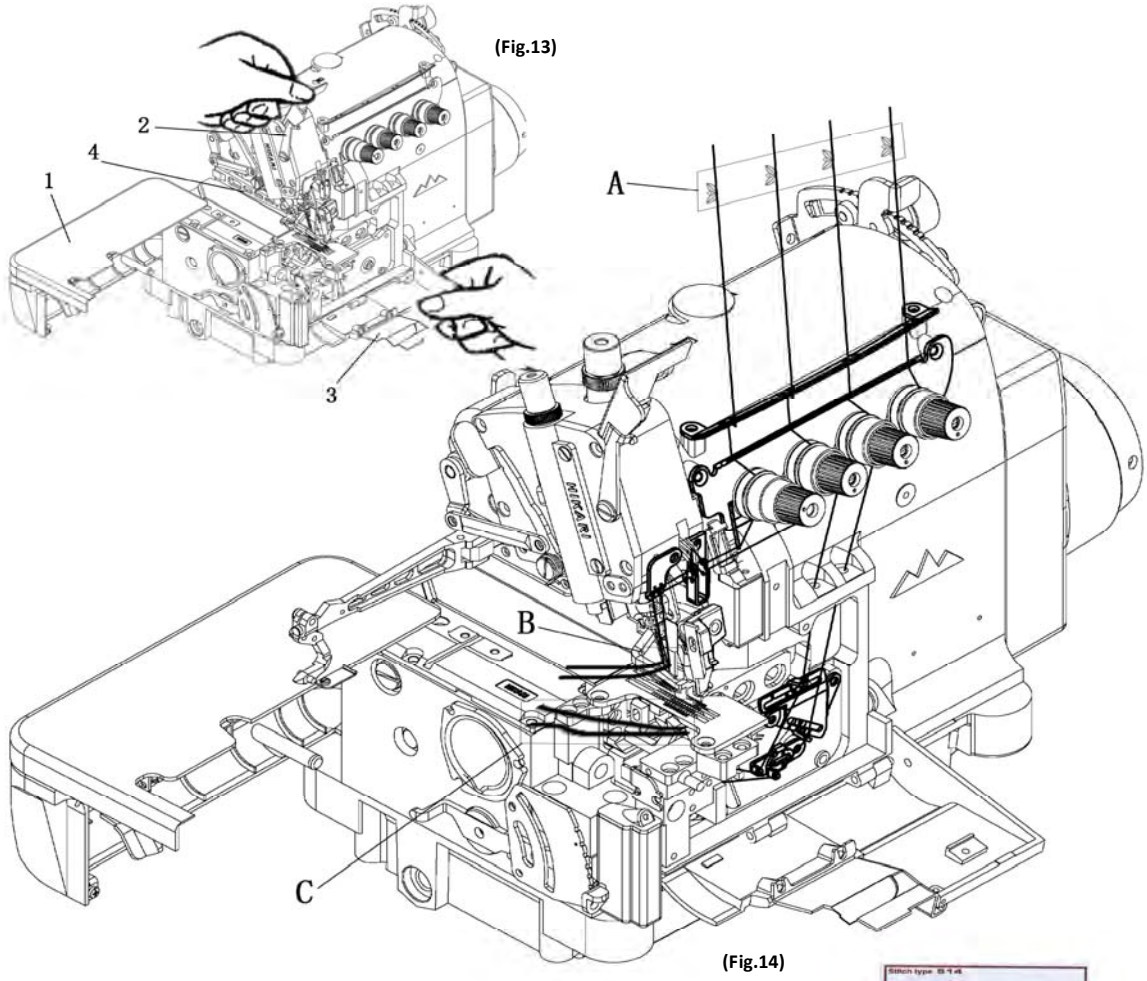

(Fig.13)

(Fig.14)

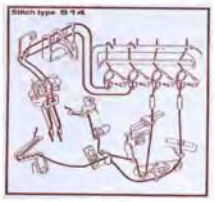

1. Open the big cover 1,eye shield cover 2,front cover3,the arm of presser foot 4. After threading , please restore to the original place .(Fig 13)
2. If already threading (Fig 14)

A:please connect the already threading annd the sewing machine threading .

B: needles thread

Cuuting the joint head first ,then threading .

C: looper thread ,chain stitch looper thread

3. Threading according to the threading drawing

➢ **change needle**

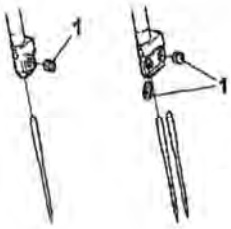

(Fig.15)

note

Before change needle , please turn off the power , unplug the plug from power socket .
Please loosen the screw 1(but don't pull off the screw) to change needlw .
(Fig 15,16)
When install needles ,please place the the groove parts of the needle to the right astern ,insert the needle to the end of the thimble ,fasten the screw 1.(Fig17)

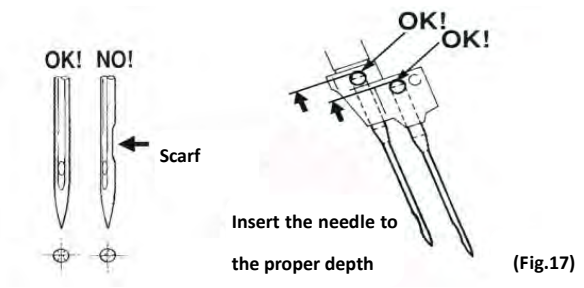

(Fig.17)

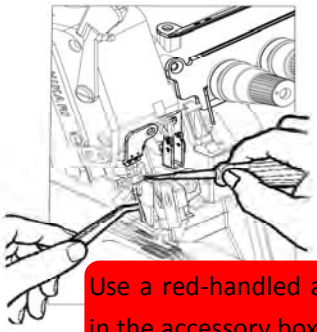
(Fig.16)

Use a red-handled acrewdriver in the accessory box.

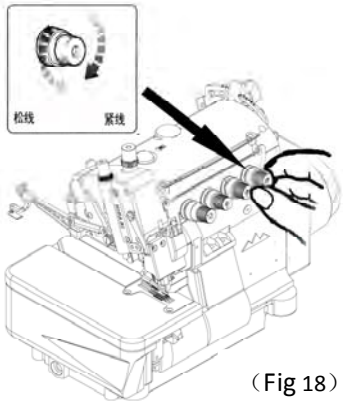

（Fig 18）

➢ **the adjustment of thread tension .**

Please use thread ajustment knnob , upper looper adjustment knob and down looper adjustment knob to adjust the thread tension .(drawing 18)
To turn by clockwise direction to tense the thread , to turn by anti-clockwise to loose the thread .in the condition that realize beautiful sewing stitch , it is better to adopt more loosen thread clamp status .

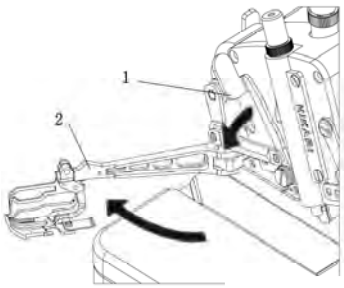

（Fig 19）

➢ **open and close the automatic presser foot lift**

⚠ note

before open and close automatic preffer foot lifer , please turn off the power ,and unplug the plug from power socket .
When open presser fott ,(Fig 19)

1. Turn the handwheel , place the needle at the toppest position .
2. Press the presser foot switch handle 1, open the arm of presser foot lifter 2 .

When close the presser foot ,(Fig 19)

1. Turn the handlewheel , place the needle to the toppest position .
2. Press the presser foot switch handle 1, return the arm of presser foot lifter to the original place .

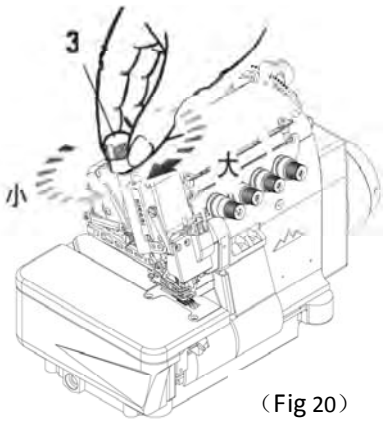

（Fig 20）

➢ **the adjustment of press strength of presser foot**

Under the condition that the feeding fabric can normal conduct , and can sewing stable stitch , try to use smaller press strength .
Turn the adjustment screw 3 to adjust the press strength of presser foot .(Fig 20)

➢ The adjustment of differencial ratio

1. Loosen the screw 4 ,press handle 5 to increase the differencial ratio , The already sewing fabric will shrink . uplift the handle 5 , the differencial ratio will reduced ,
   The already sewing fabrice will extent .

2.After adjust the dirrerencial ratio , please fasten the screw 4.
(Fig 21)

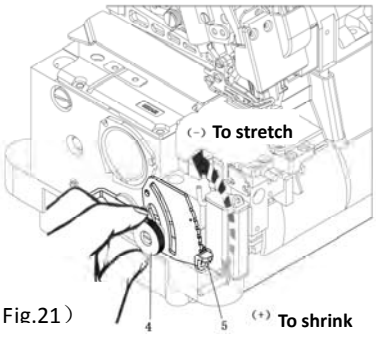

（Fig.21）

➢ The adjustment to the presser strength of upper feeding Dog

under the condition that the normally feeding fabric ,and can swing the stable stitch try to use the smaller presse strength .
turn the adjustment screw A to adjust the pressure of upper feeding dog according to the right drawing (Fig 22-1)

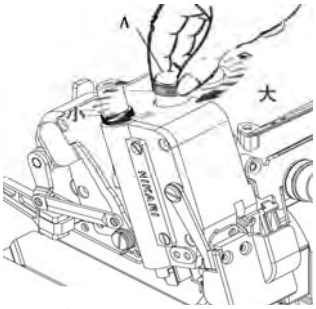

（Fig.22-1）

➢ Adjus the front –back direction of upper feeding dog

turn the adjustment screw 1 by anti-clockwise direction to loosen the screw , push the adjustent lever2 ,to realize the front – back direction adjustment of feeding dog movement .(Fig 22-2)

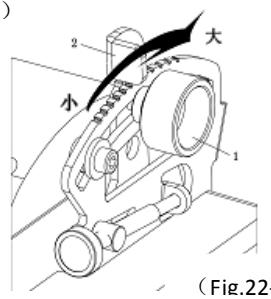

（Fig.22-2）

➢ The adjustment of the up-down direction of feed dog

Use the screwdriver to loosen bolt 1 to adjust the the up-down Moving height of feeding dog .(Fig 22-3)

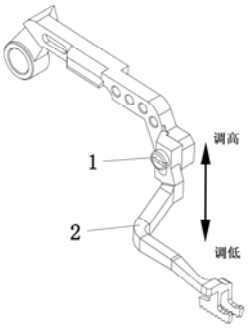

（Fig22-3）

➢ the adjustment to the stitch length

note

Before adust the stitch length ,please turn off the ower ,unplug the plug from power socket .

1. Pree the button 1 , meanwhile to turn the handwheel 2 , Pree the button to the more deep position .
2. Turn handwheel by clock-wise direction to large the stitch ; turn handwheel by anti-clockwise direction to lessen the stitch .

note

Before adjust the stitch length ,please adjust the dirrerencial ratio .

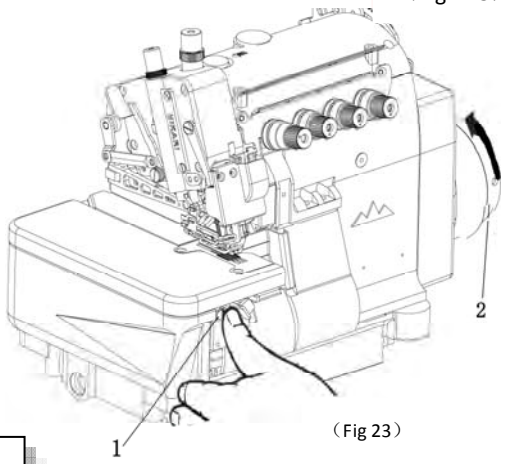

（Fig 23）

note

When adjust the knife , please turn off the power , unplug the plug from power socket , need special profession mechanician to do .

Please be careful that the blade of the knife have the danger of scratch the finger .

➢ change the upper knife

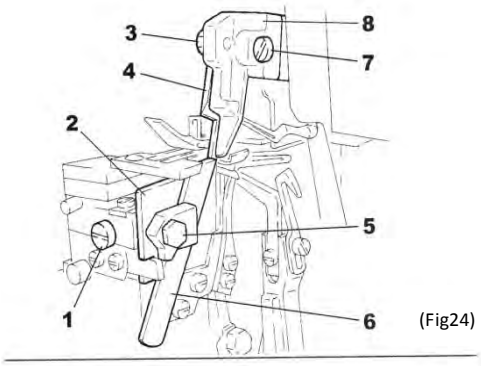

(Fig24)

1. Please loosen the screw 1 ,lay the down knife support to the most left place , use screw 1 to make temperary fasten .
2. Please pull out the screw 3 , disassemble the upper knife 4 . use screw 3 to temperary fasten the new upper knife , turn handwheel , place the upper knife at the lowest position ,up-down moving the upper knife to adjust , and make the upper knife and dowknife to occluse at deepth of 0.5-1.0mm ,and then fasten the screw 3.
3. Aim the centry point of upper knife to centry crossed parts of the down knife 6 (refer Fig26),loosen the screw 1, after confirm the no gap between the upper knife and down knife , fasten the screw 1.
4. Put thread between the upper knife and down knife , turn handwhee to make sure can smoothly cut the thread .

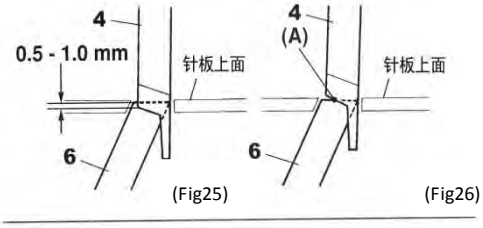

(Fig25) (Fig26)

(Fig27)

➢ change the down knife

1. Loosen the screw 1 , place the down knife support in the most left position , use screw 1 to temperary fasten .
2. Loosen the screw 5 , take out the dow knife 6 , change the new down knife . to adjust the down knife ,make the gap between the down knife blade and needle plate at 0-0.3mm ,and then fasten the screw 5 .
3. Operate according to the method 3 and method 4 of changing upper knife .(Fig27)

➢ the stitch width adjustment

1. Loosen the screw 1 , place the down knife support to the most left position , and use screw 1 to temperary fasten .
2. Loosen the screw 7 , move the upper knife base 8 by left and right direction , to adjust the stitch width .
3. Operate according to the method 3-4 of changing upper knife .

➢ the method of grinding knife

The material of upper knife superhard alloy , no need to grind in a long timme usage .when the knife is getting no sharp , please grind the down knife .

the grind method see(Fig 28),

if don't the correct method to grind knife , it will make the knife no sharp ,can not immediately cut the thread ,please note .

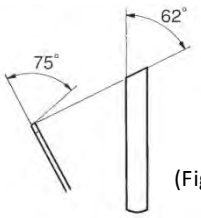

(Fig28)

When grind upper knife , need use the special grinding machine , it is better to purchase the gringding machine from the special shop . in order to improve the working efficiency , please keep the upper knife in your stock .(see Fig 28)

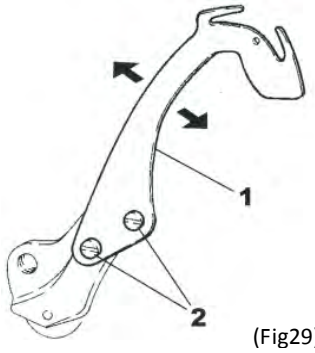

(Fig29)

➢ **the standard install place and adjustment to the thread routing pieces**

note

Before adjust the thread routing pieces , please turn off the power and unplu the plug from power socket ,need professional technician to operate .

Turn the handwheek , when the thread routing piece 1 in the the lowest place , please adjust the upper segment to the thread routing piece dimension when adjusting , please loosen the screw 2 to make the adjustment (Fig 29 , 30)

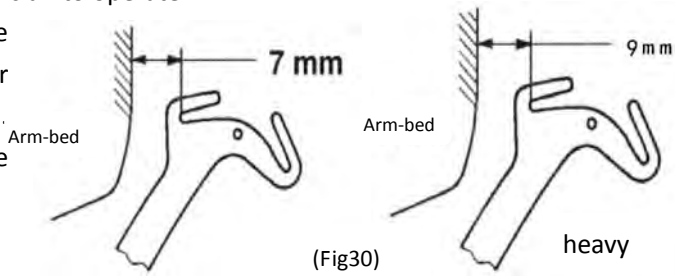

(Fig30)

➢ **the the standard installation place and adjustment of needle thread line piece**

The install place of needle thread line piece is different as the different sewing machine model , the standard place is the needle routing line piece in the lowest and toppest position ,please install the needle thread line piece to the suitable sewing machine model of the correct place .

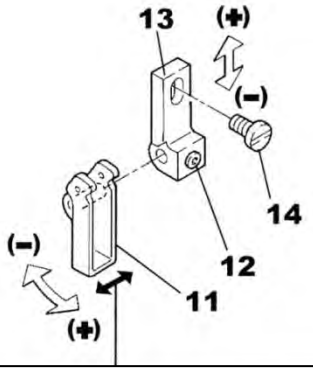

(Fig31)

the adjustment standard of needle thread line pieces (Fig.31)

Loosen the screw 12 and 14 , ajust by moving the needle thread line piece by the arrow instruct direction and adjust the needle thread line support 13 .

Adjust to the (+)direction , the thread draw out will get more ,adjust to the (-)direction , the thread draw out , Will get less .after adjustment ,please fasten the screw12 and 14 .

Adjust thread guide 11 left or right so that the needle thread take-up is centered between the two prongs of each thread guide.

HXT6814T

The standard installation position of needle line piece (Fig32)

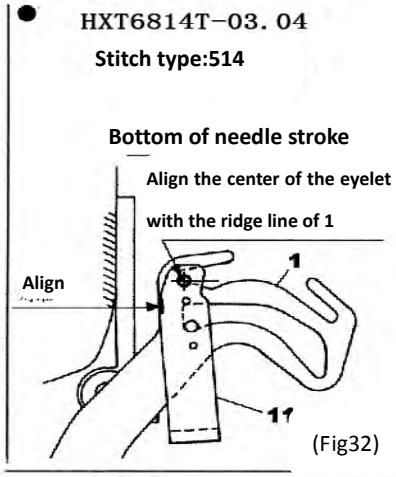

(Fig32)

➢ **The standard installation position of looper routing piece and line pieces and the thread routing quantity adjustment of routing camshaft .**

note

Before adjust the routing camshaft ,please turn off the power ,unplug the plug from power socket , need professional technician to operate .

1. To adjust the looper routing piece 9 and 11 at the place of looper'most right .the standard installation place as per the drawing .
   Please refer the drawing , loosen screw 10 and 2 , adjust the looer routing piece 9 and 11 .
   Adjust the looper routing piece 19 and 11 to the （+）direction , the routing quantitative would become bigger ;adjust to the （-）direction , the routing quantitative would become smaller .
2. The standard installation place of The looper line piece 13,15,17 refer to the drawing .
   Refer drawing , please loosen the screw 14,16 and 18 to adjust the every looper line piece .
   Adjust every looper line piece to the (+)direction , the thread routing quantitative will get more big , to the (-) direction , the threading routing quantitative will get smaller .(Fig 33)

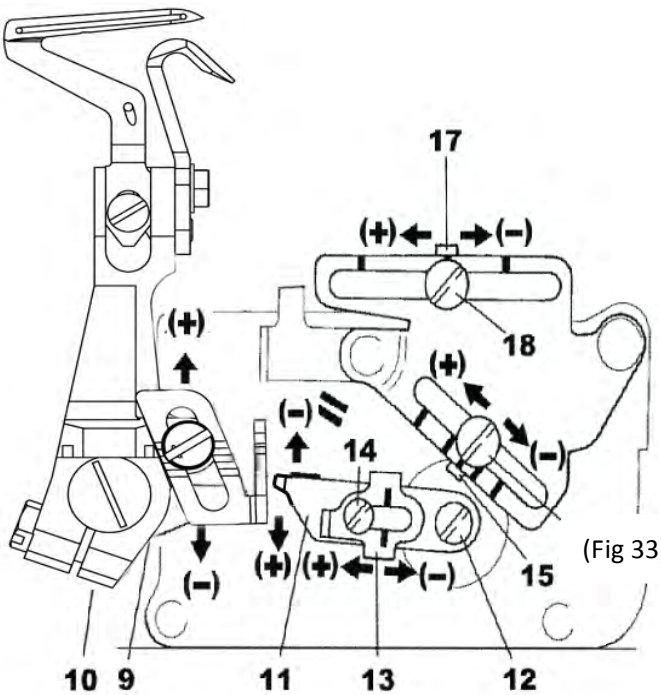

(Fig 33)

The standard install place of looper routing piece and line piece (Fig34)

the most right place of down looper

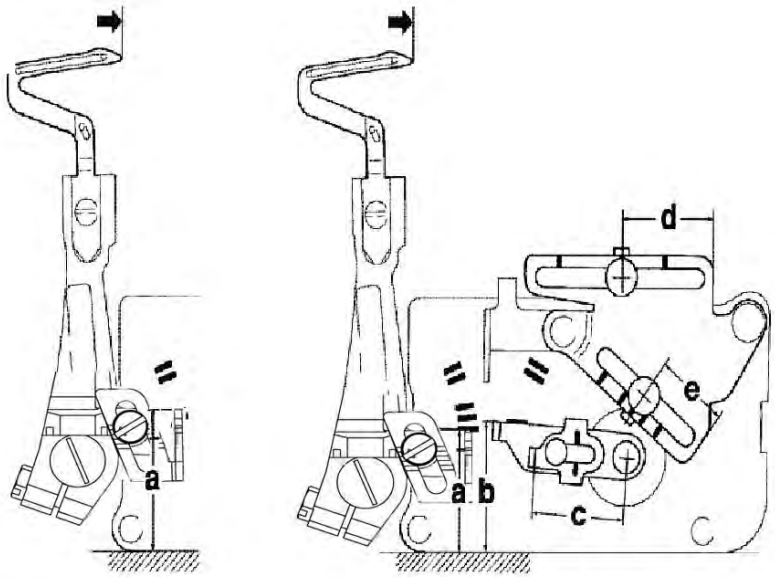

（drawing 34）

HXT6800T	(a)	(b)	(c)	(d)	(e)
HXT6814T-04	30	29	20	33.5	10.5

(mm)

HXT6800T	(a)	(b)	(c)	(d)	(e)
HXT6814T-03	26	29	28	21.5	14.5

(mm)

The dimension adjusting table

(mm)

Subclas			(a)	(b)	(c)	(a)	(b)				
HXT6814T-03	10.5	3.8	13.5	5.5	10.5	0.5	0.2	0.7-0.9	5.5	1-6	4.5
HXT6814T-04	11.9	4.2	13.5	5.5	11	0.5	0.2	0.7-0.9	6	1-8	5.5

standard used needle

Subclass	DC×27
HXT6814T-03	#11
HXT6814T-04	#11

HX series sub-model specification

Application	the thickness of fabric	Subclass	Number of needle	Number of thread	Needle space	width of stitch	the length of stitch	Diff.feed rate	Presser foot lift	maxium speed
generalsewing	Medium-heavy	HXT6814T-03	2	4	2	4	0.6 - 3.8	0.7 - 2	5.5	6,700
	Extra heavy	HXT6814T-04	2	4	2	4	0.8-5	0.7 - 2	6	6,300

HIKARI®

专注高端 电脑包缝机的领导者

FOCUSING ON HIGH-END COMPUTERIZED OVERLOCK MACHINE LEADER

HXT6818T系列 DIRECT-DRIVE HIGH-SPEED UP-DOWN FEEDING OVERLOCK MACHINE 直驱上下送布高速包缝机

使用说明书

INSTRUCTION MANUAL BOOK

上海富山精密机械科技有限公司

Hikari(shanghai)precise Machinery Science&technology Co.,Ltd

中国上海市金山区朱泾工业园区中达路800号

NO.800,zhongda Road,jinshan Zone,shanghai,china

电话：(00)86-21-67311111

TEL：(00)86-21-67311111

传真：(00)86-21-67311111

Fax：(00)86-21-67311111

E-mail:hikari@chinahikari.com

http:www.chinahikari.com

此说明书仅作参考，如有修改恕不另作通知。

This manual is only for reference

* If there is any modification, we apologize for the changing hence caused.

CE

通过 ISO9001:2008 质量管理体系认证

➢ 针过线件的标准安装位置和调节

针过线件的安装位置因缝纫机的型号而异，以针打线片处于最下方位置和最上方位置时为标准，将各针过线件安装到符合其型号的位置处。

五线系列 针过线件调节标准（图 1）

松动螺丝 7～10，将针过线件 3～5 和针过线件托架 6 沿箭头方向移动进行调节。

向图中符号（+）的方向调节时，线的抽出量增多，想符号（-）的方向调节时，线的抽出量减少，调节后，请拧紧螺丝 7～10。

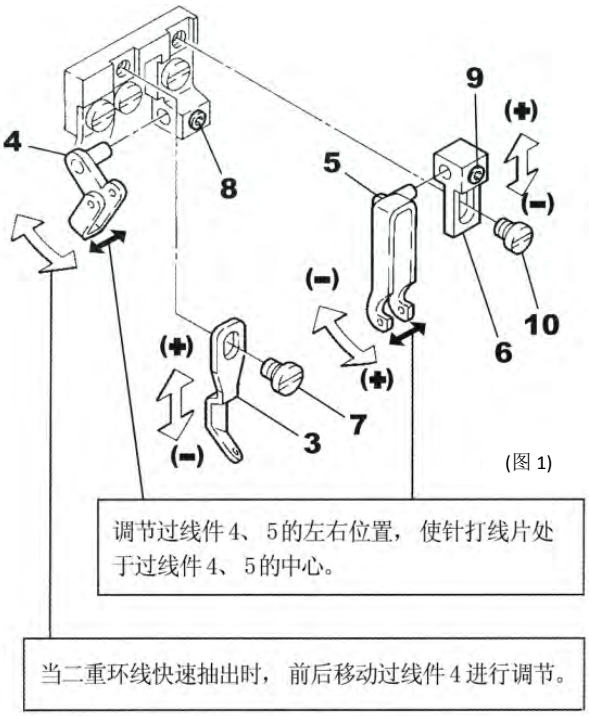

(图 1)

五线系列

针过线件的标准安装位置

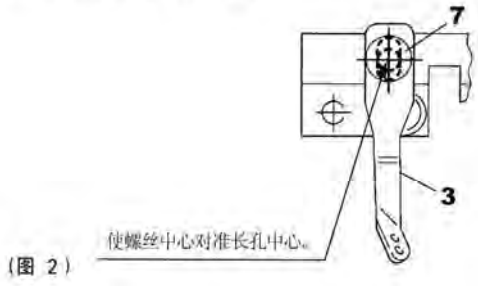

（图 2）

●HXT6816T-03

针脚形式: 516

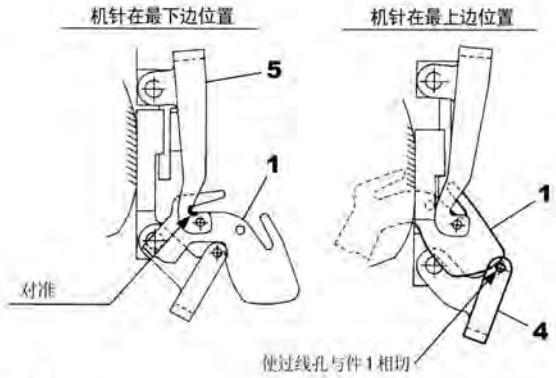

（图 3）

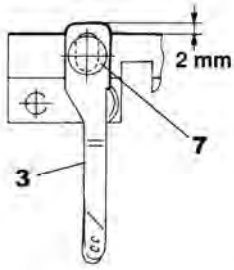

（图 4）

●HXT6816T-04

针脚形式: 516

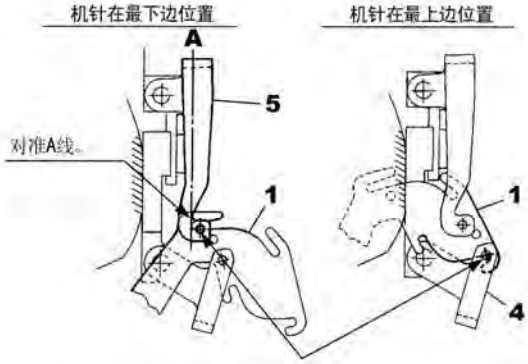

将过线孔中心对准 1 的棱线。

（图 5）

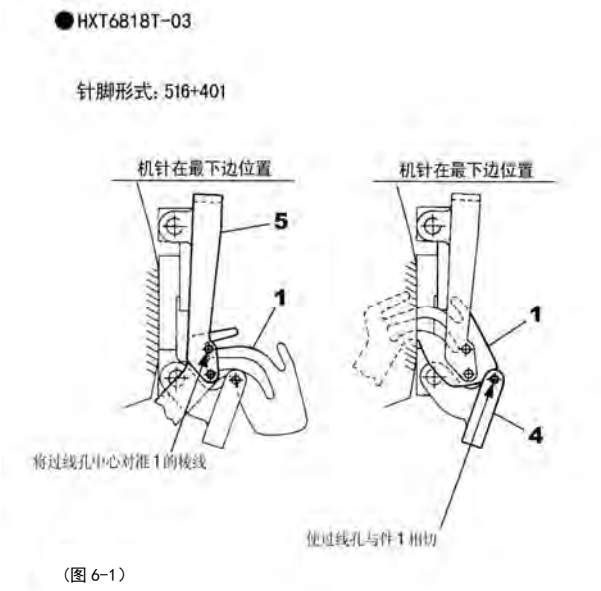

（图 6-1）

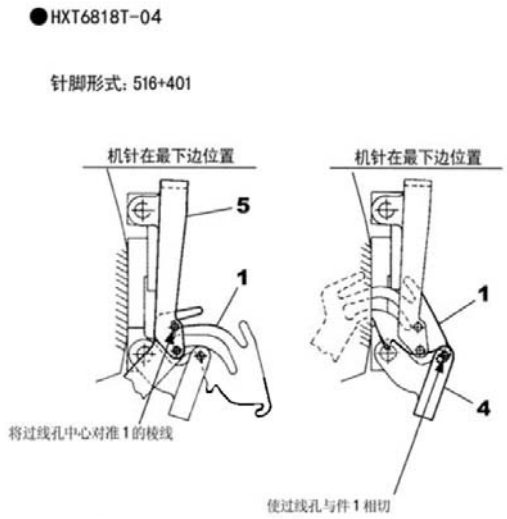

（图 6-2）

➢ **链弯针打线片和过线件的标准安装位置与打线凸轮打线量的调节**

⚠ 注意

调节打线凸轮时，务必将缝纫机的电源关掉，将插头从电源插销上拔下来之后，请专业技术人员进行操作。

1. 旋转手轮，将针置于最上边位置。
2. 松动螺丝 2，旋转链弯针打线凸轮 1 进行调节，使链弯针打线凸轮 1 的 A 点和托架上面为准。（图 7）
3. 松动螺丝 4，上下移动打线导轮 3，进行调节，使打线导轮 3 的 B 点对准链弯针打线凸轮 1 的 B 点。（图 7）
4. 参考图示，松动螺丝 7、8，左右移动过线件 5、6 进行调节。将过线件 5、6 调节到图中的（+）符号方向时，打线量变大；调节到（-）符号的方向时，打线量变小。（图 8）

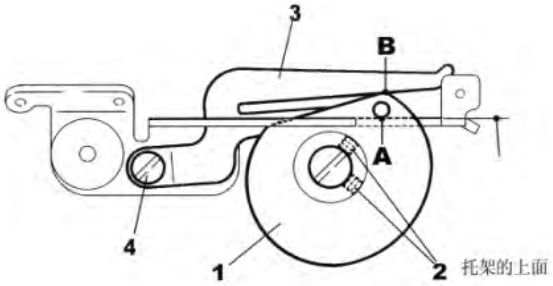

(图 7)

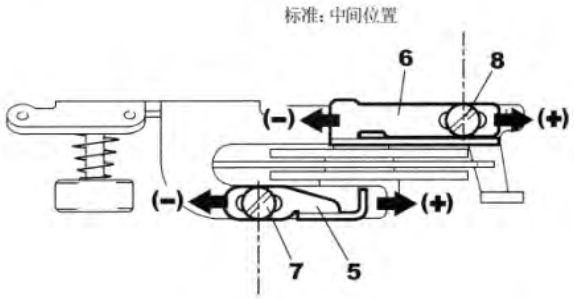

标准：中间位置

(图 8)

➢ **弯针打线片和过线件的标准安装位置与打线凸轮打线量的调节**

⚠ 注意

调节打线凸轮时，务必将缝纫机的电源关掉，将插头从电源插销上拔下来之后，请专业技术人员进行操作。

1. 弯针打线片 9 和 11 用下弯针最右边位置调节。各自的标准安装位置如下图示。
   参与图示，请松动螺丝 10 和 12，调节弯针打线片 9 和 11。
   将弯针打线片 19 和 11 调节到图中（+）符号的方向时，打线量变大；调节到（-）符号的方向时，打线量变小。
2. 弯针过线件 13、15、17 的标准安装位置如下图所示。
   参考图，请松动螺丝 14、16 和 18，调节各弯着针过线件。
   将各弯针过线件向图中的（+）符号调节时，线的打出量增多，向（-）符号调节时，线的打出量减小。（图 9）

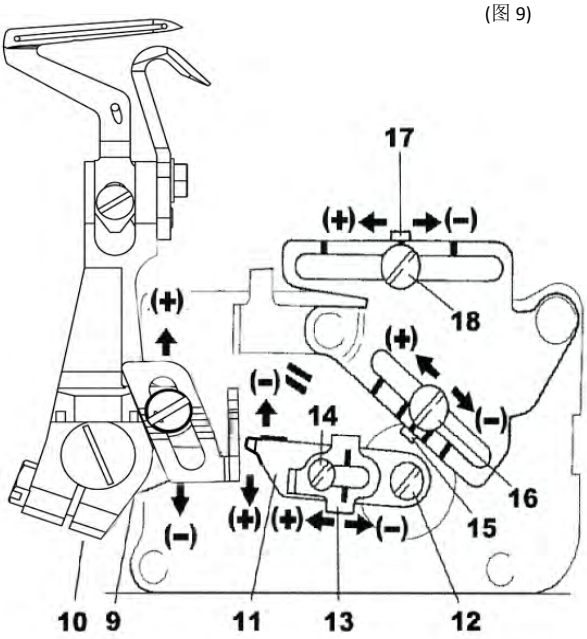

(图 9)

弯针打线片和过线件的标准安装位置（图 10）

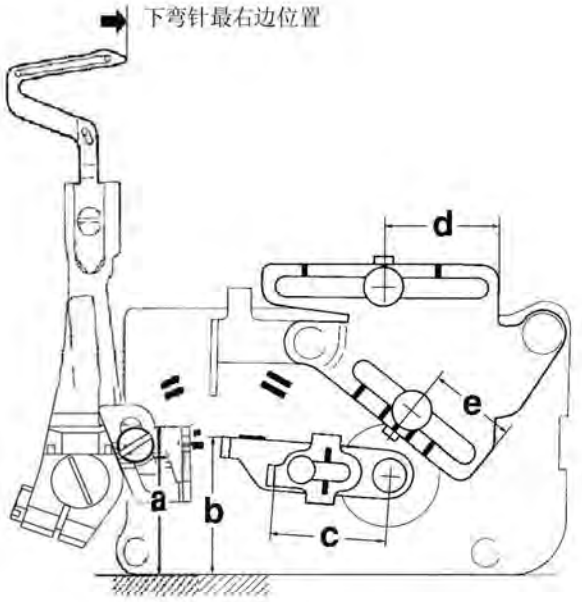

五、六线系列	(a)	(b)	(c)	(d)	(e)
HXT6816T-03	26	29	20	21.5	17.5
HXT6816T-04	30	29	20	33.5	10.5
HXT6818T-03	30	29	25	21.5	14.5
HXT6818T-04	30	29	20	33.5	10.5

(mm)

(图 10)

调节基准表

五、六线系列

(mm)

子型号			(a)	(b)	(c)	(a)	(b)				
HXT6816T-03	10.4 - 10.6	3.7 - 3.9	14.5	4.4 - 4.7	10.8	0.5	0.2	0.7 - 0.9	5.5	1.4 - 1.6	1-6	4.5
HXT6816T-04	11.8 - 12	4.1 - 4.3	14.5	4.4 - 4.7	12	0.5	0.2	1.0 - 1.2	7	1.6 - 1.8	1-8	5.5
HXT6818T-03	10.4 - 10.6	3.7 - 3.9	13.5	5.4 - 5.7	10.5	0.5	0.2	0.7 - 0.9	5.5	1.4 - 1.6	1-6	4.5
HXT6818T-04	11.8 - 12	4.1 - 4.3	13.5	5.4 - 5.7	11.8	0.5	0.2	1.0 - 1.2	7	1.6 - 1.8	1-8	5.5

五、六线系列

标准用针

子型号	DC×27	
HXT6816T-03	# 14	
HXT6816T-04	# 21	
HXT6818T-03	# 11	
HXT6818T-04	# 21	

HX系列子型号规格表

五、 六线系列

用 途	布料厚度	子型号	针数(根)	线数(根)	针距(mm)	摆幅(mm)	线速长(mm)	差动比	压脚抬升量 (mm)	最高旋转数 (r.p.m.)
无缝缝	中厚－厚	HXT6816T-03	2	5	3	4	0.6 - 3.8	0.7 - 2	5.5	6,300
	极厚	HXT6816T-04	2	5	5	6	0.8 - 5	0.8 - 1.5	7	6,300
	中厚－厚	HXT6818T-03	3	6	3×2	4	0.6 - 3.8	0.7 - 2	5.5	6,300
	极厚	HXT6818T-04	3	6	5×3	4	0.8 - 5	0.8 - 1.5	7	6,300

The dimension adjusting table

(mm)

Subclas			(a)	(b)	(c)	(a)	(b)				
HXT6814T-03	10.5	3.8	13.5	5.5	10.5	0.5	0.2	0.7-0.9	5.5	1-6	4.5
HXT6814T-04	11.9	4.2	13.5	5.5	11	0.5	0.2	0.7-0.9	6	1-8	5.5

standard used needle

Subclass	DC×27
HXT6814T-03	#11
HXT6814T-04	#11

HX series sub-model specification

Application	the thickness of fabric	Subclass	Number of needle	Number of thread	Needle space	width of stitch	the length of stitch	Diff.feed rate	Presser foot lift	maxium speed
generalsewing	Medium-heavy	HXT6814T-03	2	4	2	4	0.6 - 3.8	0.7 - 2	5.5	6,700
	Extra heavy	HXT6814T-04	2	4	2	4	0.8-5	0.7 - 2	6	6,300

➢ **Positioning the thread guides/Adjusting the amount thread to be suppiled from the needle thread take-up**

The location of each needle thread guide varies with types of machine.When the needle thread take-up is at the bottom and the top of its travel,position each needle thread guide according to the machine being used.

5 thread series Adjusting the needle thread guides(Fig.1)

Loosen screws 7 to 10.Adjust thread guides 3 to 5,and needle thread bracket 6 by moving them in the direction of the arrows.

To increase the amount of thread to be supplied,move each thread guide,and needle thread bracket in the direction of (+).To decrease the amount of threand to be supplied,moving each thread guide,and needle thread bracket in the direction of(-).

After this adjustment,tighten screws 7 to 10.

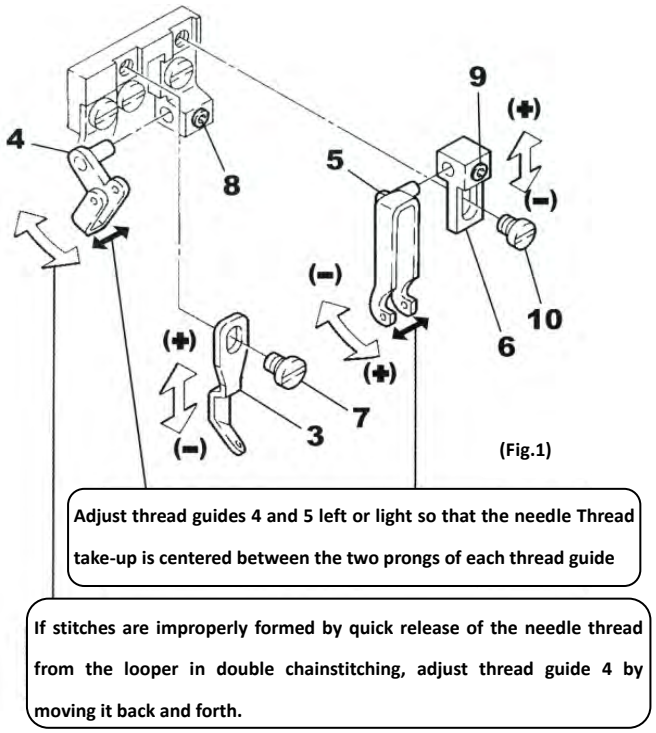

(Fig.1)

5 thread series
Positioning the thread guides

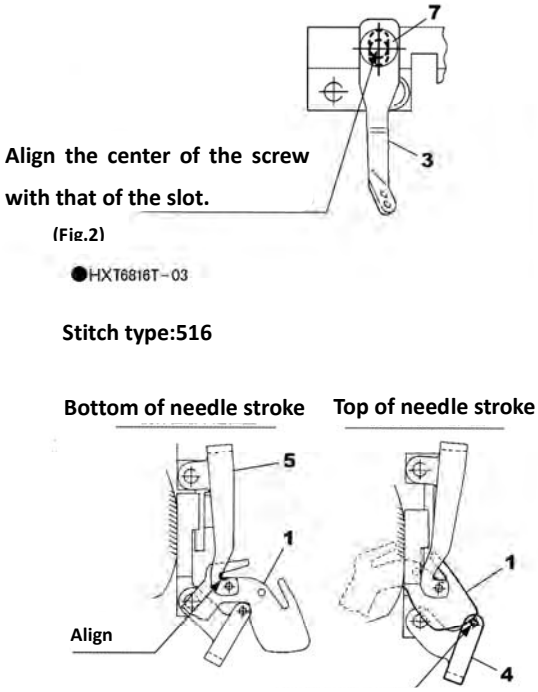

(Fig.2)

(Fig.3)

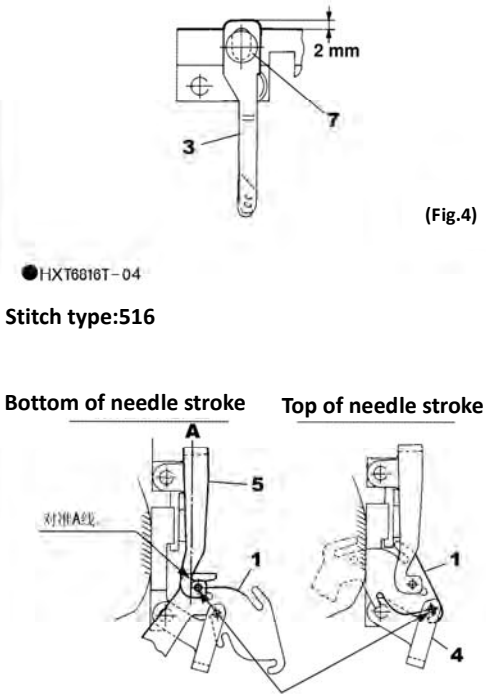

(Fig.4)

(Fig.5)

f 1

●HXT6818T-03

Stitch type:516+401

Bottom of needle stroke

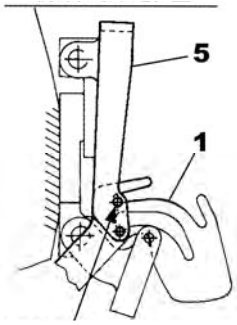

Top of needle stroke

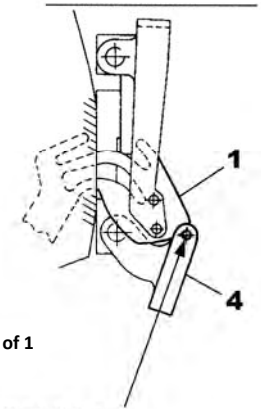

Align the center of the eyelet with the ridge line of 1

Align the end of the eyelet with the ridge line of 1

(Fig.6-1)

●HXT6818T-04

Stitch type:516+401

Bottom of needle stroke

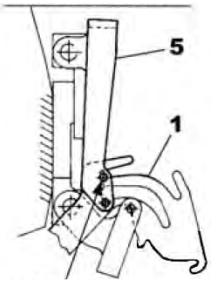

Top of needle stroke

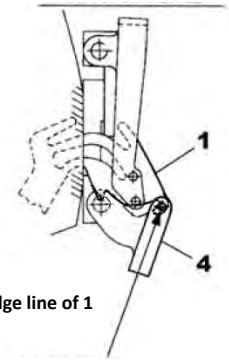

Align the center of the eyelet with the ridge line of 1

Align the end of the eyelet with the ridge line of 1

(Fig.6-2)

➢ **Positionting the front looper thread take-up and thread guides.Adjusting the amount of thread to be supplied from the looper thread take-up**

⚠ CAUTION

Always turn off the power,unplug the machine and then well-qualified technicians should adjust the thread take-up.

1. Turn the hand wheel until the needle is at the top of its stroke.
2. Align point A on double chainstitch looper1 with the top surface of the bracket.Adjustment is made by loosening screw4 and moving thread take-up guide3 up or down(Fig.7)
3. Align point B on thread take-up guide3 with point B on double chainstitch looper1.Adjustment is made by loosening screw4 and moving thread take-up guide3 up or down(Fig.7)
4. To adjust thread guides 5 and 6,loosen screw 7 and 8,and move guides 5 and 6 to the left or right(see the illustration).To increase the amount of thread,move thread guides 5 and 6 in the direction of (+).To decrease the amount of thread,move thread guides 5 and 6 in the direction of (-)(Fig.8)

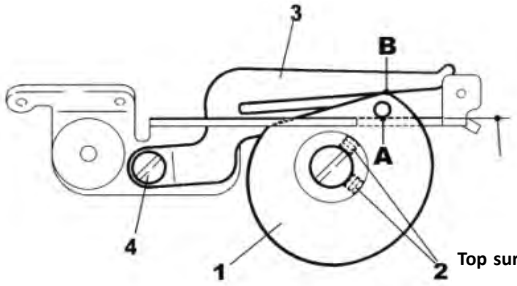

Top surface of the bracket

(Fig.7)

Standard: intermediate position

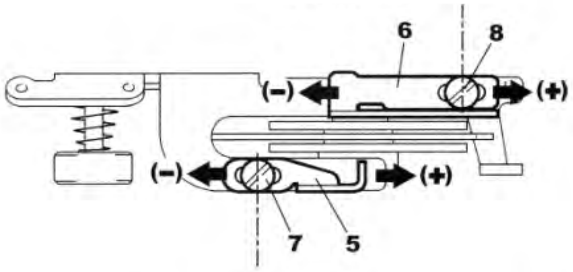

Standard: intermediate position

(Fig.8)

➢ **Positioning the looper thread take-up and thread guides.Adjusting the amount of thread to be supplied from the looper thread take-up**

CAUTION

Always turn off the power,unplug the machine and then well-qualified technicians should adjust the thread take-up.

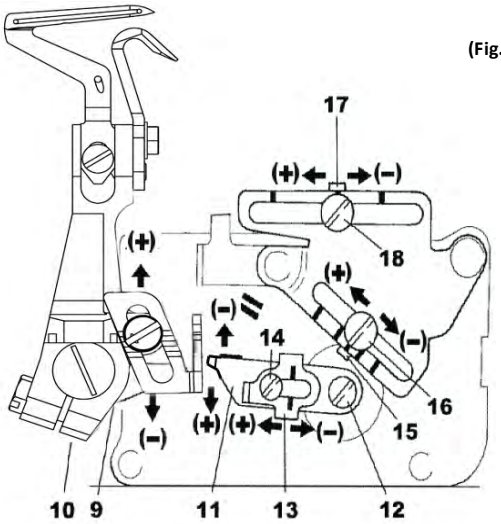

(Fig.9)

1. Adjust looper thread take-up 9 and 11 with the lower looper at the extreme right end of its travel.
   Position looper thread take-up 9 and 11 by referring to the table below.Loosen screws 10 and 12,and adjust looper thread take-up 9 and 11.
   To increase the amount of thread,move looper thread take-up 9 and 11 in the direction of (+)
   To decrease the amount of thread,move looper thread take-up 9 and 11 in the direction of(-)。
2. The standard location of looper thread guides 13,15 and 17 is shown on the next page.Loosen screws 14,16 and 18,and adjust eache looper thread guide(see the illustration).
   To increase the amount of thread to be supplied,move each looper thread guide in the direction of (+).
   To decrease the amount of thread to be supplied,move each looper thread guide in the direction of (-).(Fig.9).

The standard position of thread looper and thread guides(Fig.10)

Lower looper at the extreme right end of its travel

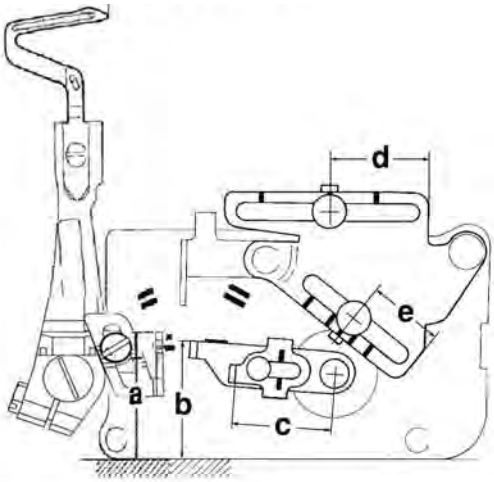

5 & 6 thread series	(a)	(b)	(c)	(d)	(e)
HXT6816T-03	26	29	20	21.5	17.5
HXT6816T-04	30	29	20	33.5	10.5
HXT6818T-03	30	29	25	21.5	14.5
HXT6818T-04	30	29	20	33.5	10.5

(mm)

(Fig.10)

The dimension adjusting table

5 & 6 thread series

(mm)

子型号			(a)	(b)	(c)	(a)	(b)				
HXT6816T-03	10.4 - 10.6	3.7 - 3.9	14.5	4.4 - 4.7	10.8	0.5	0.2	0.7 - 0.9	5.5	1.4 - 1.6	1-6	4.5
HXT6816T-04	11.8 - 12	4.1 - 4.3	14.5	4.4 - 4.7	12	0.5	0.2	1.0 - 1.2	7	1.6 - 1.8	1-8	5.5
HXT6818T-03	10.4 - 10.6	3.7 - 3.9	13.5	5.4 - 5.7	10.5	0.5	0.2	0.7 - 0.9	5.5	1.4 - 1.6	1-6	4.5
HXT6818T-04	11.8 - 12	4.1 - 4.3	13.5	5.4 - 5.7	11.8	0.5	0.2	1.0 - 1.2	7	1.6 - 1.8	1-8	5.5

5&6 thread series

Needle standard

Subclass	DC×27	
HXT6816T-03	# 14	
HXT6816T-04	# 21	
HXT6818T-03	# 11	
HXT6818T-04	# 21	

HX series type form

5&6 thread series

Application	Fabric weight	Subclass	Number of needle	Number of thread	Needle space	Overage width	Stitch length	Diff.feed rate	Presser foot lift	Max speed
Plain seaming	Medium-heavy	HXT6816T-03	2	5	3	4	0.6 - 3.8	0.7 - 2	5.5	6,300
	Extra heavy	HXT6816T-04	2	5	5	6	0.8 - 5	0.8 - 1.5	7	6,300
	Medium-heavy	HXT6818T-03	3	6	3×2	4	0.6 - 3.8	0.7 - 2	5.5	6,300
	Extra heavy	HXT6818T-04	3	6	5×3	4	0.8 - 5	0.8 - 1.5	7	6,300

HIKARI®

专注高端 电脑包缝机的领导者

FOCUSING ON HIGH-END
COMPUTERIZED OVERLOCK MACHINE LEADER

HXT6800T系列 DIRECT-DRIVE HIGH-SPEED UP-DOWN FEEDING OVERLOCK MACHINE 直驱上下送布高速包缝机

零件手册
PARTS BOOK

上海富山精密机械科技有限公司
Hikari(shanghai)precise Machinery Science&technology Co.,Ltd

中国上海市金山区朱泾工业园区中达路800号
NO.800,zhongda Road,jinshan Zone,shanghai,china
电话：（00）86-21-67311111
TEL：（00）86-21-67311111
传真：（00）86-21-67311311
Fax：（00）86-21-67311311
E-mail:hikari@chinahikari.com
http:www.chinahikari.com

此说明书仅作参考，如有更改恕不另作通知。
This manual is only for reference.
If there is any modification , we apologize for the changing hence caused.

CE

通过 ISO9001:2000
质量管理体系认证

1. 机壳部分（Machine cover) P1-P2
2. 密封部分(1) (Airpoof mechanism⑴) P3-P4
3. 密封部分(2) (Airpoof mechanism(2)) ..... P5—P6
4. 主轴传动部分（Mainshaft transmit mechanism) P7-P8
5. 针杆传动部分(Needle Rod transmit mechanism) P9-P10
6. 针板部分（Needle bar mechanism) P11-P12
7. 上弯针传动部（Upper looper driving mechanism) P13-P14
8. 下弯针传动部分（Lower looper driving mechanism)..... P15-P16
9. 针距调节部分(Adjusting of the stitch space mechanism) P17-P18
10. 送布传动部分（Feed transmit mechanism)..... P19-P20
11. 上送布传动部分(1) (Top feed transmit mechanism ⑴) P21-P22
12. 上送布传动部分(2) (Topfeed transmit mechanism (2))..... P23-P24
13. 上送布传动部分⑶（Top feed transmit mechanism (3))..... P25-P26
14. 剪切部分(Thread trimmer mechanism)..... P27-P28
15. 压布传动部分（Presser foot driving mechanism)..... P29-P30
16. 润滑部分（Lubrication component)..... P31-P32
17. 油盘部分（Oil reservoir component)..... P33-P34
18. 夹线器部分(Thread tension component)..... P35—P36
19. 过线件部分⑴（Thread guider component (1))..... P37-P38
20. 过线件部分⑵（Thread guider component (2))..... P39-P40
21. 硅油装置部分（Silicone oil component)..... P41-P42
22. 压脚部分（Presser foot mechanism)..... P43-P44
23. 附件部分（Accessory list)..... P45-P48
24. HXT6816T-03(04)KHC2/AK 五线下吸专用件
(5 thread lower suction fittings) P49-P58
25. HXT6818T-03(04)KHC2/AK 六线下吸专用件
(6 thread lower suction fittings) P59-P60

1

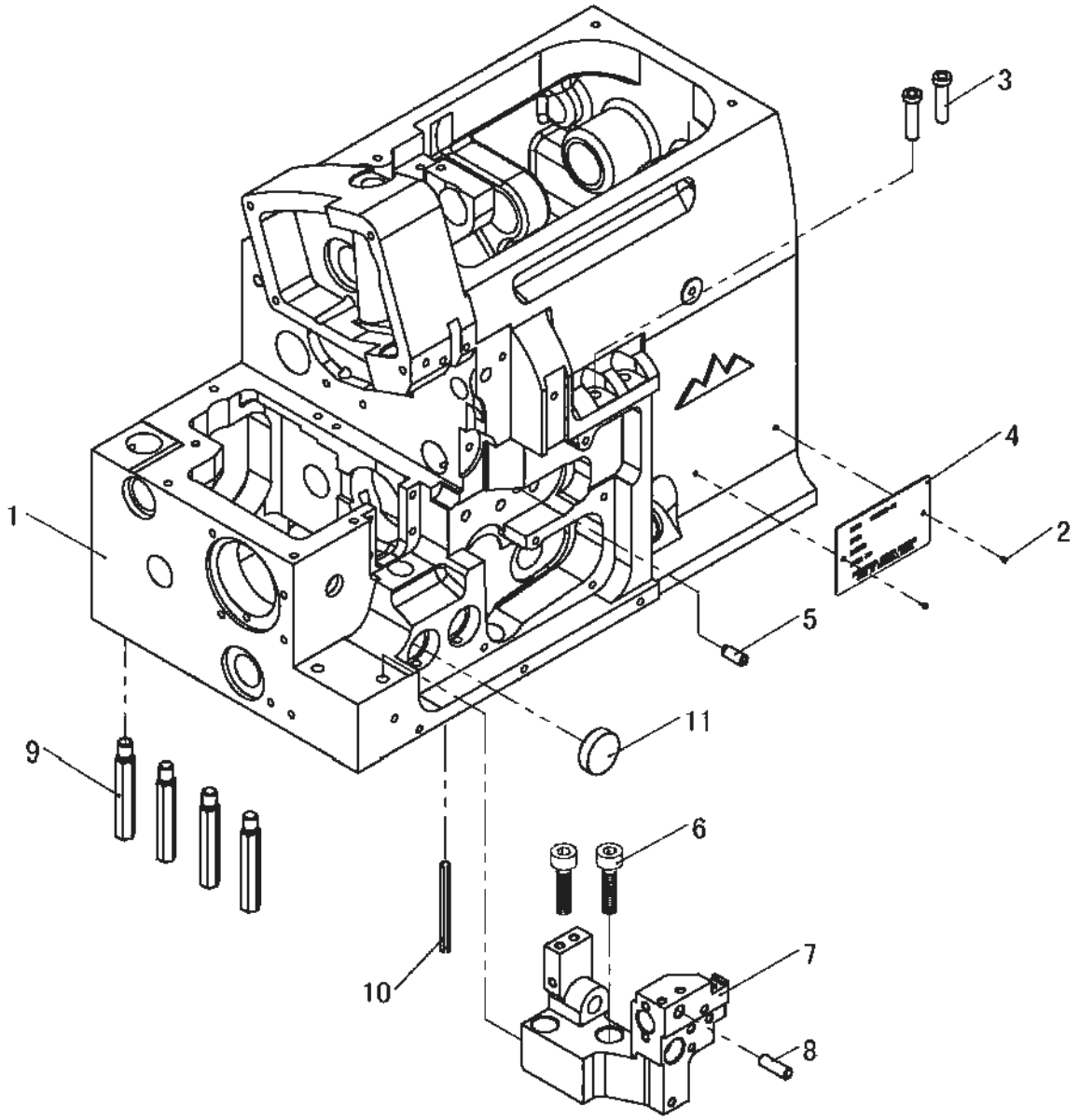

1.机壳部分 Machine cover

序号	图号	名称		4线	4线厚料	备注
		中文	英文			
1	2101.01-01	机壳	Machine Head	1	1	
2	17-3200500-5	机身编码固定铆钉	Setscrew	2	2	
3	201.01-06G	过线管	Thread Guide Pipe	2	2	
4	HO-004	型号牌	Model Plate B	1	1	
5	15-1501005-1	限位销	Limited Pin	1	1	
6	01-506002524-1	针板固定螺钉	Needle Board Setscrew	2	2	
7	201.01-10G	针板支座	Needle Board Supporting	1	1	
8	15-1501405-1	限位销	Limited Pin	1	1	
9	201.01-12	支柱	Support Pillar	4	4	
10	15-2404503-1	油管（弹性圆柱销）	Oil Pipe (elastic cylinder pin)	1	1	
11	22-19005500	橡胶帽	Rubber Cushion	1	1	

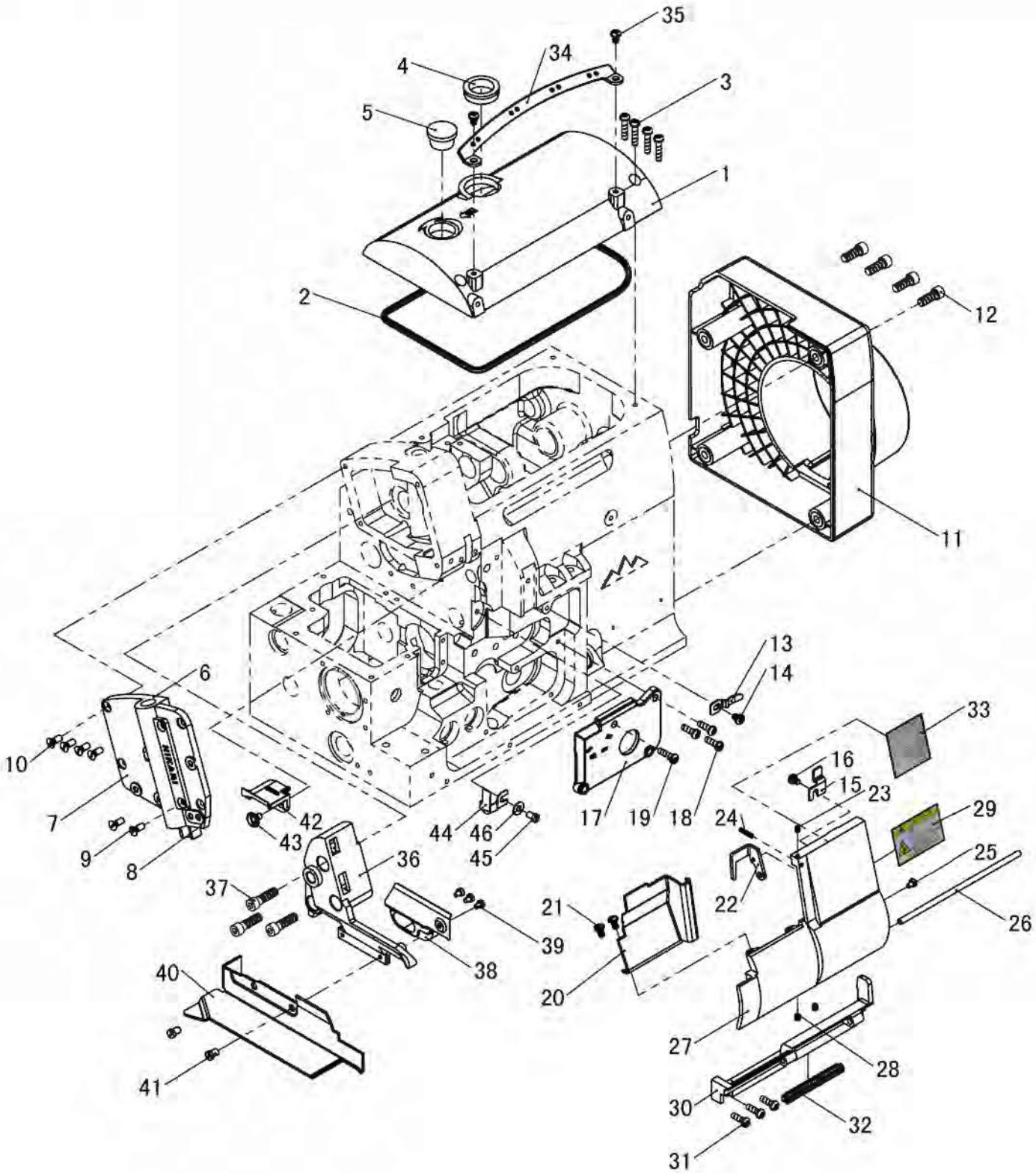
35
34
4
3
5
1
2
12
11
13
14
6
33
10
16
15
23
7
42
17
19
18
24
29
43
44
46
9
8
45
36
25
37
22
21
26
39
38
40
20
27
28
41
30
32
31

2.密封部分(1) Airproof mechanism(1)

序号	图号	名称		4线	4线厚料	备注
		中文	英文			
1	2101.02-01	上盖	Upper Cover	1	1	
2	2101.02-02	油封垫	Oil Reservior Gasket	1	1	
3	01-404001823-1	上盖螺钉	Screw	4	4	
4	201.02-04	油窗	Oil Sight Window	1	1	
5	22-19807024	油塞	Oil Plug	1	1	
6	2101.02-03	机头前盖组件	Front Cover ASM	1	1	
7	2101.02-03-01	机头前盖1	Front Cover	(1)	(1)	
8	2101.02-03-02	机头前盖2	Front Cover	(1)	(1)	
9	01-104000721-1	机头前盖连接螺钉	Screw	(2)	(2)	
10	01-104001021-1	机头前盖固定螺钉	Screw	(4)	(4)	
11	2101.02-04	电机罩	Motor Cover	1	1	
12	01-505001224-1	电机罩螺钉	Screw	4	4	
13	201.02-13	前板锁紧舌	Cloth Waste Cover Stopper	1	1	
14	01-404000523-1	前盖板锁紧舌螺钉	Screw	1	1	
15	201.02-15	前盖板锁紧板	Cloth Waste Locket	1	1	
16	01-404000523-1	前盖板锁紧板螺钉	Screw	1	1	
17	201.02-17	前盖板	Cloth Waste Cover	1	1	
18	01-404001223-1	前盖板螺钉A	Screw	3	3	
19	01-404001423-1	前盖板螺钉B	Screw	1	1	
20	201.02-20	前盖板罩板	Cover	1	1	
21	01-404000623-1	前盖板罩板螺钉	Screw	2	2	
22	201.02-22	前盖板防转压板	Anti-rotating Clamp	1	1	
23	01-803000414-1	螺钉	Screw	1	1	
24	01-803001214-1	螺钉	Screw	1	1	
25	01-503000421-1	前盖板防转压板螺钉	Screw	1	1	
26	201.02-27	铰链销	Looper Cover Hinge Shaft	1	1	
27	201.02-28G1	前罩壳	Cover	1	1	
28	01-804000414-1	铰链销紧定螺钉	Screw	2	2	
29	101.01-13	安全指示牌	Safety-indicating Plate	1	1	
30	201.02-30	前罩壳下铰链	Hinge	1	1	
31	01-404001223-1	下铰链螺钉	Screw	3	3	
32	201.02-32	铰链销弹簧	Hinge Shaft Spring	1	1	
33	202.02-33	穿线标识	Threading Sign	1	1	
34	201.02-35G	过线板A	Thread Guide Plate	1	1	
35	01-404000623-1	过线板螺钉	Screw	2	2	
36	2101.02-05	托架	Bracket	1	1	
37	01-506002524-1	托架螺钉M6×25	Screw	3	3	
38	2101.02-06	盖板	Cover	1	1	
39	01-503000421-1	盖板螺钉M3×3.5	Screw	3	3	
40	2101.02-07	导布板	Fabric Guard	1	1	
41	01-645000621-1	M4.5×6螺钉	Screw	2	2	
42	2101.02-08	橡胶盖	Cover	1	1	
43	2101.02-09	M4螺钉	Screw	1	1	
44	2101.02-10	卡板	Cover	1	1	
45	01-604000621-1	M4×5.5螺钉	Screw	1	1	
46	09-0420408-1	波形垫片	Spring Washer	1	1	

3

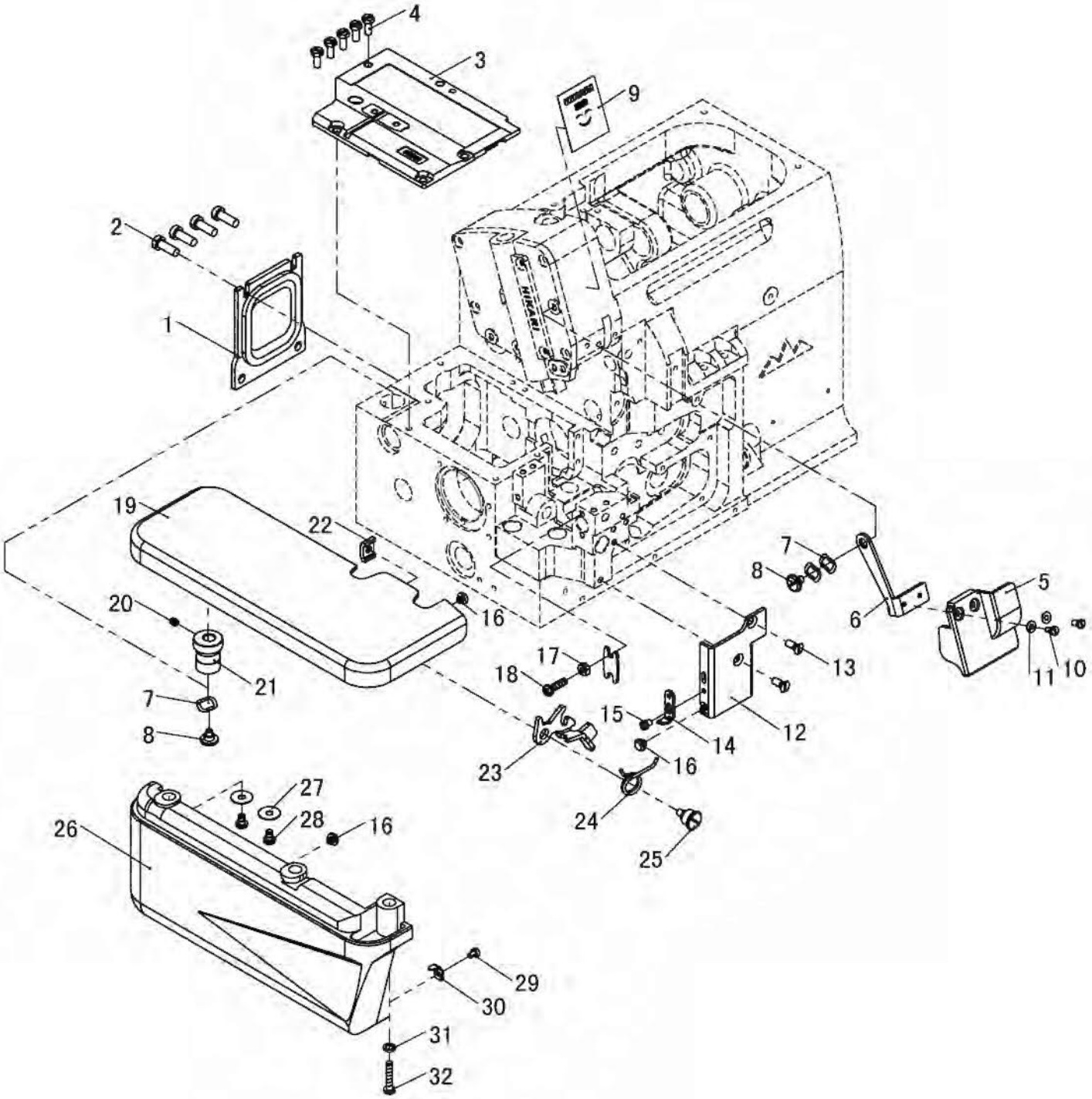
4
3
9
2
1
19
22
7
8
5
6
20
16
13
11
10
17
18
21
7
8
15
14
12
23
16
27
24
26
28
16
25
29
30
31
32

3.密封部分(2) Airproof mechanism(2)

序号	图号	名称		4线	4线厚料	备注
		中文	英文			
1	201.03-01	后盖板组件	Rear Cover ASM	1	1	
2	01-504001021-1	后盖板螺钉	Screw	4	4	
3	201.03-03	左上盖	Cover	1	1	
4	01-704000821-1	左上盖固定螺钉	Screw	5	5	
5	201.03-05	观察镜	Observing Mirror	1	1	
6	201.03-06	观察镜支架	Mirror Bracket	1	1	
7	08-0700311-1	波形弹性垫圈	Cushion	3	3	
8	201.03-08	台螺钉	Screw	2	2	
9	H0-002	新笑脸牌	Series Card	1	1	
10	01-603000621-1	观察镜固定螺钉	Setscrew	2	2	
11	05-032050700-1	平垫圈	Ring	2	2	
12	201.03-12	防护板	protective board	1	1	
13	01-104000721-1	防护板固定螺钉	Setscrew	2	2	
14	201.03-14	压板	Pressure Board	1	1	
15	01-535000421-1	防护板压板固定螺钉	Screw	1	1	
16	201.03-16	防震塞	Rubber Cushion	3	3	
17	03-604000320-1	调节螺母	Adjusting Nut	1	1	
18	01-404001623-1	调节螺钉	Adjusting Screw	1	1	
19	201.03-22G	缝台组件	Cloth Base ASM	1	1	
20	01-804000414-1	缝台转动轴固定螺钉	Screw	1	1	
21	201.03-24	缝台转动轴套	Eccentric Bushing	1	1	
22	201.03-26	缝台闸固定板	Fix Board	1	1	
23	201.03-27	缝台闸	Cloth Base Switch-type Stopper	1	1	
24	201.03-28	缝台闸弹簧	Cloth Base Switch-type Spring	1	1	
25	201.03-29	缝台闸固定螺钉	Screw	1	1	
26	201.03-30G1	缝台下罩壳组件	Cloth Base Lower Cover ASM	1	1	
27	05-043201350-1	下罩壳垫圈	Lower Cover Gasket	2	2	
28	01-404000623-1	下罩壳固定螺钉A	Lower Cover Setscrew	2	2	
29	01-503000421-1	下罩壳压板螺钉	Pressure Board Screw	1	1	
30	201.03-34	下罩壳压板	Lower Sover Pressure Board	1	1	
31	07-0421111-1	弹簧垫圈	Cushion	1	1	
32	01-404002023-1	下罩壳固定螺钉B	Setscrew	1	1	

4

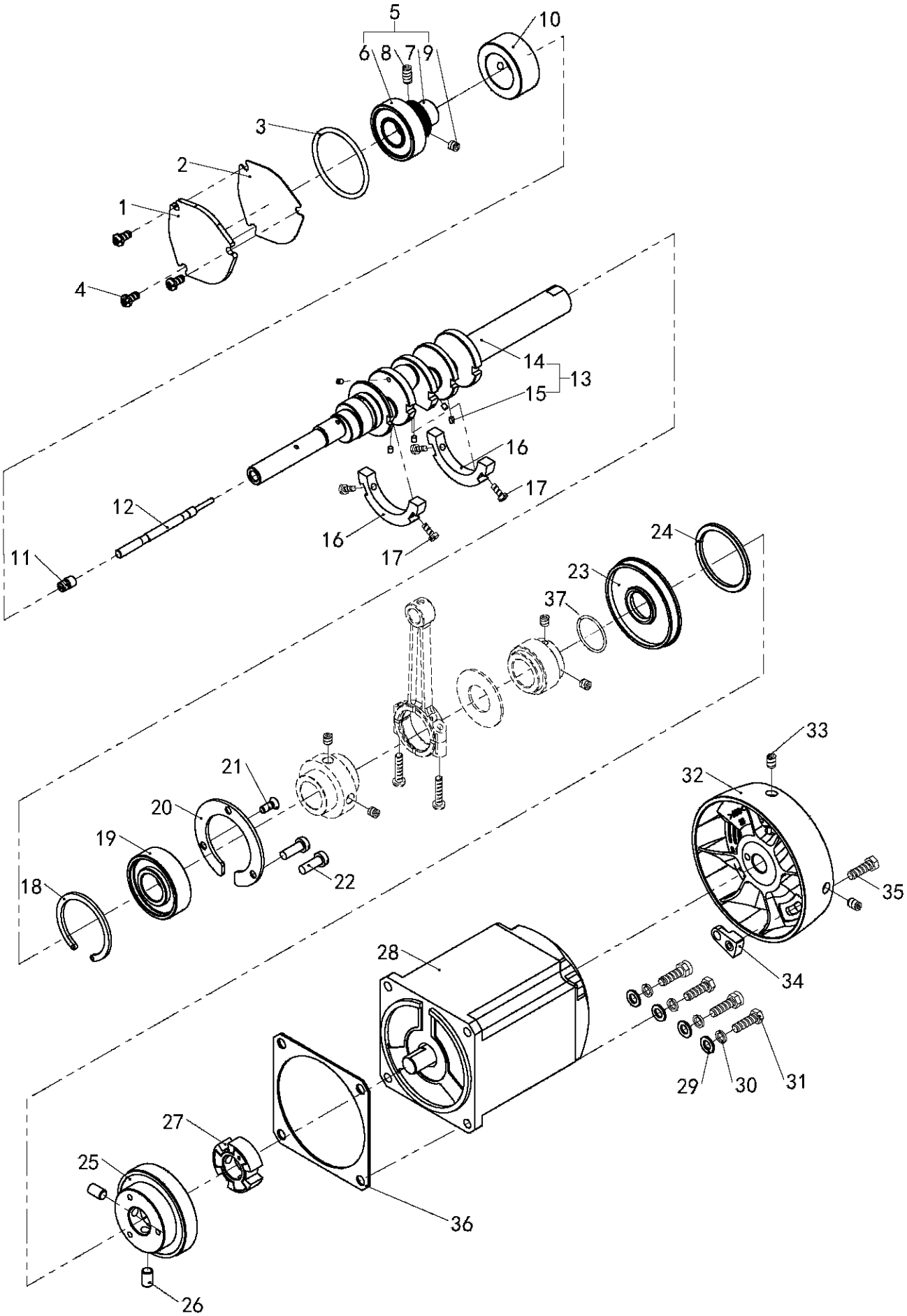
5
10
6
8
7
9
3
2
1
4
14
13
15
16
17
12
16
17
11
24
23
37
33
21
32
20
19
22
35
18
28
34
29
30
31
27
25
36
26

4.主轴传动部分 Main shaft transmit mechaniam

序号	图号	名称		4线	4线厚料	备注
		中文	英文			
1	201.04-01G	主轴前轴承盖	Main and Front bearing cover	1	1	
2	201.04-01G-01	轴承盖橡胶垫	bearing cover Rubber sealing	1	1	
3	12-387265	O型圈	O-ring	1	1	
4	01-404000823-1	轴承座固定螺钉A	Setscrew A	3	3	
5	201.04-05	轴承组件	Crankshaft Ball Bearing ASM	1	1	
6	14-6202-RZ	轴承	Crankshaft Ball Bearing	(1)	(1)	
7	201.04-05-2	轴承套（外齿）	Shaft Bushing	(1)	(1)	
8	01-805001014-1	轴承紧套紧定螺钉A	Setscrew A	(1)	(1)	
9	01-805000514-1	轴承紧套紧定螺钉B	Setscrew B	(1)	(1)	
10	201.04-14	主轴中轴套	Mainshaft Bushing	1	1	
11	201.04-09	主轴端螺钉	Screw	1	1	
12	201.04-18	油量销	Oil Adjusting Bar	1	1	
13	2101.04-10	主轴组件	Mainshaft Components	1		
	2102.04-10	主轴组件	Mainshaft Components		1	
14	2101.04-10-01	主轴	Mainshaft	(1)		
	2102.04-10-01	主轴	Mainshaft		(1)	
15	201.04-10-02	主轴堵螺钉	Mainshaft Setscrew	(5)	(5)	
16	201.04-12	主轴平衡块	Mainshaft Balance Block	2	2	
17	01-503000821-1	主轴平衡块固定螺钉	Setscrew	4	4	
18	11-4251824-1	制动环	braking Ring	1	1	
19	14-6203	单列向心球滚珠轴承	Crankshaft Ball Bearing	1	1	
20	210.04-30	轴承挡圈	Bearing Ring	1	1	
21	01-104000721-1	沉头螺钉	Screw	1	1	
22	01-504000621-1	螺钉	Screw	2	2	
23	13-16270530	油封	Oil Seal	1	1	
24	260.04-28	波形垫圈	Washer	1	1	
25	14-6907-2RS/17	连体轴承	Bearing	1	1	
26	01-806751014-1	连体轴承螺钉	Screw	2	2	
27	260.04-44	电机联轴器（连体）	Motor Linker	1	1	
28	M0-05B-550/01	电机	Motor Asm	1	1	
29	05-056101000-4	平垫片	Washer	4	4	
30	07-0521313-1	弹簧垫片	Spring Washer	4	4	
31	01-505001624-1	直驱电机螺钉	Screw	4	4	
32	210.04-27G	手轮组件3#	Hand Wheel ASM 3#	1	1	
33	02-815281014-1	手轮螺钉	Screw	2	2	
34	103.13-107	磁钢座组件	Magnet Block	1	1	
35	18-404000823-3	三组合螺钉	Screw	1	1	
36	102.11-41	步进电机垫片	MOTOR Washer	1	1	
37	12-150150	O型圈	O-ring	1	1	

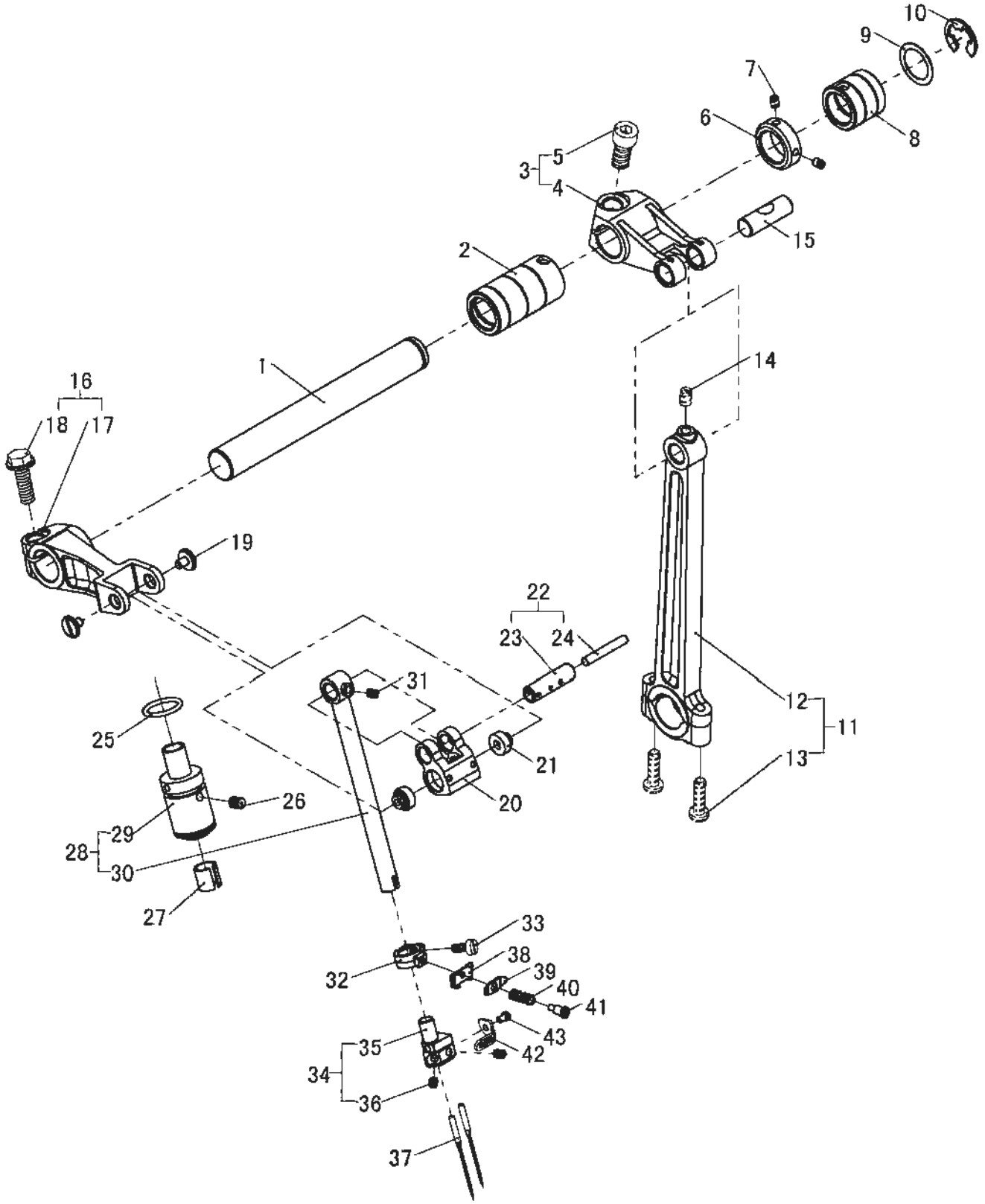
10
9
7
6
8
5
3
4
15
2
1
14
16
18
17
19
22
23
24
31
12
11
13
25
21
26
20
29
28
30
27
33
38
32
39
40
41
43
35
42
34
36
37

5.针杆传动部分 Needle Rod transmit mechanism

序号	图号	名称		4线	4线厚料	备注
		中文	英文			
1	2101.05-01	针杆传动轴	Needle Rod Transmit Shaft	1	1	
2	201.05-02	机针传动轴前套筒	Front Bushing	1	1	
3	201.05-03	机针传动轴曲柄组件	Needle Rod Transmit Shaft Crank ASM	1	1	
4	201.05-03-01	机针传动轴曲柄	Needle Rod Transmit Shaft Crank	(1)	(1)	
5	01-506751224-1	机针传动轴曲柄螺钉	Screw	(1)	(1)	
6	2101.05-02	轴箍	Thrust Collar	1	1	
7	01-803000314-1	挡圈紧定螺钉	Setscrew	2	2	
8	2101.05-03	机针传动轴后套筒	Rear Bushing	1	1	
9	201.05-08	铜垫片	Copper Spacer	1	1	
10	06-0800816-1	卡簧	E-spring	1	1	
11	201.05-10	针杆连杆组件	Connecting Rod ASM	1	1	
12	201.05-10-01	针杆连杆	Connecting Rod	(1)	(1)	
13	01-404001623-1	针杆连杆螺钉	Connecting Rod Screw	(2)	(2)	
14	01-804000614-1	机针传动连杆紧定螺钉	Connecting Rod Setscrew	1	1	
15	201.05-13	销轴	Feed Branch Crank Pin	1	1	
16	2101.05-04	针杆曲柄组件	Needle Rod Crank ASM	1	1	
17	2101.05-04-01	针杆曲柄	Needle Rod Crank	(1)	(1)	
18	19-706751225-1	针杆传动摆杆螺钉	Screw	(1)	(1)	
19	2101.05-05	M3×4螺钉	Screw	2	2	
20	2101.05-06	连接曲柄	Link	1	1	
21	2101.05-07	螺纹销	Pin	2	2	
22	2101.05-08	针杆连接销组件	Needle Driving ASM Pin ASM	1	1	
23	2101.05-08-01	针杆连接销	Needle Driving ASM Pin	(1)	(1)	
24	2101.05-08-02	油线 φ3×34	Oil Wick	(1)	(1)	
25	12-115150	O型圈	O-ring	1	1	
26	01-804000544-1	针杆套螺钉	Needle Rod Collar Screw	1	1	
27	201.05-23	毛毡	Felt	1	1	
28	2101.05-10	针杆组件	Needle Rod ASM	1	1	
29	2101.05-10-01	针杆轴套	Needle Rod Collar	(1)	(1)	
30	2101.05-10-02	针杆	Needle Rod	(1)	(1)	
31	01-803000444-1	M3×4螺钉	Screw	1	1	
32	201.05-26	拦线板支架	Needle Thread Presser Guide	1	1	
33	01-903000621-1	固定螺钉	Setscrew	1	1	
34	202.05-29	针夹组件	Needle Clamp ASM	1	1	
35	202.05-29-01	针夹	Needle Clamp	(1)	(1)	
36	01-803000324-1	针夹螺钉	Needle Clamp Screw	(2)	(2)	
37	201.05-32G	机针（DC×27#11）	Needle	2	2	
38	201.05-33	拦线板（A）	Needle Thread Presser Guide (A)	1	1	
39	201.05-34	拦线板（B）	Needle Thread Presser Guide (B)	1	1	
40	201.05-35	拦线板弹簧	Needle Thread Presser Spring	1	1	
41	201.05-36	拦线板紧固螺钉	Hinge Screw	1	1	
42	202.05-37	机针穿线片	Needle Thread Guide Base	1	1	
43	01-502000321-1	机针穿线片紧固螺钉	Setscrew	1	1	

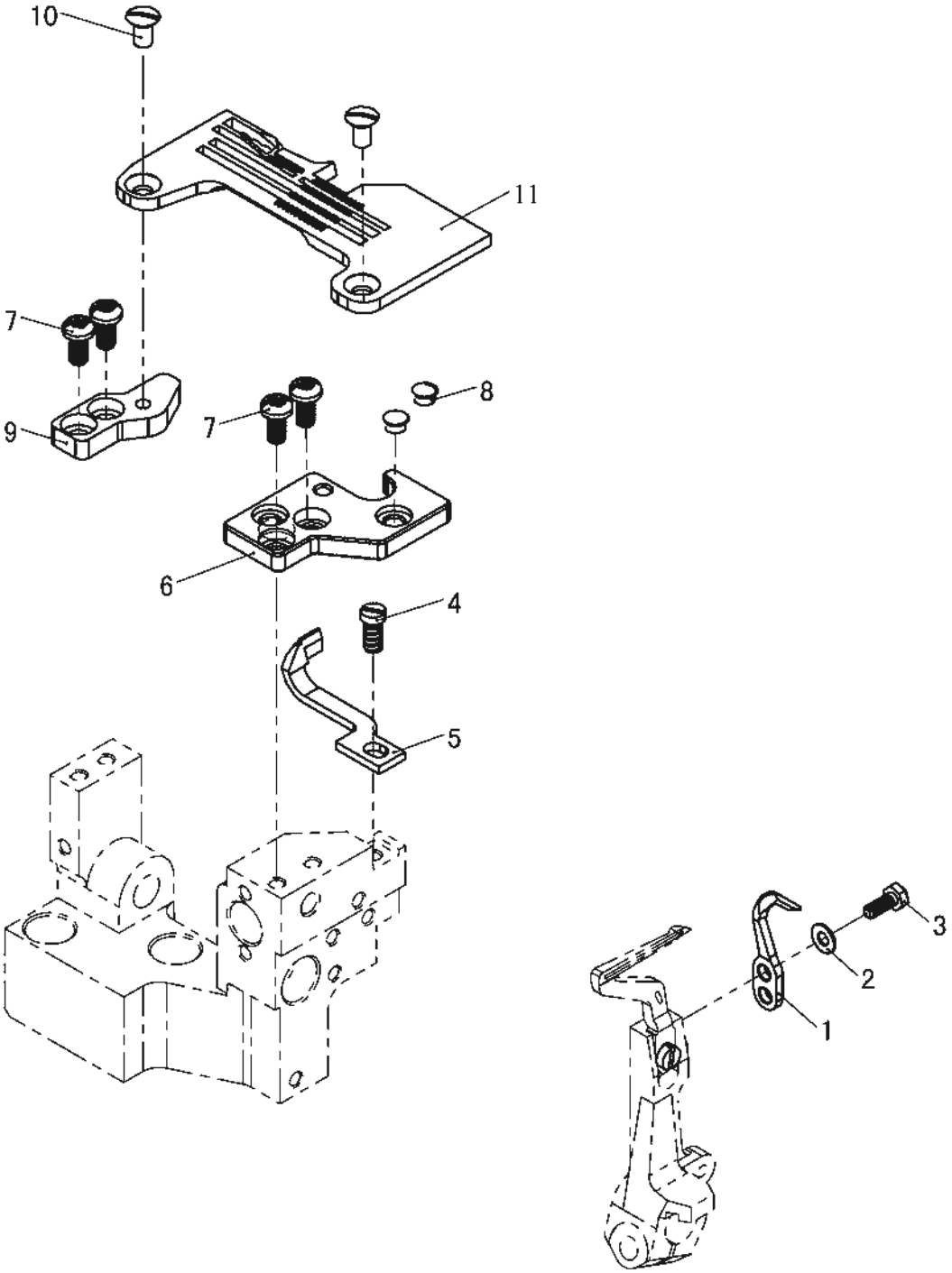
10
11
7
9
7
8
6
4
5
3
2
1

6.针板部分 Needle bar mechanism

序号	图号	名称		4线	4线厚料	备注
		中文	英文			
1	201.06-01	主直针后护针板	Lower Looper	1	1	
2	09-0330507-1	主直针后护针板垫片	Lower Looper Gasket	1	1	
3	01-703000521-1	主直针后护针板螺钉(B)	Lower Looper Screw (B)	1	1	
4	01-504000821-1	主直针前护针板螺钉	Screw	1	1	
5	201.06-11	主针前护针板	Thread Guide Upper	1	1	
6	201.06-12	针板座	Needle Plate Base	1	1	
7	01-404000823-1	针板座螺钉	Screw	4	4	
8	201.03-16	防震塞	Rubber Cushion	2	2	
9	201.06-15	针板定位块	Needle Plate Positioning Block	1	1	
10	01-204000821-2	针板螺钉	Screw	2	2	
11	202.06-17	针板	Needle Plate	1	1	

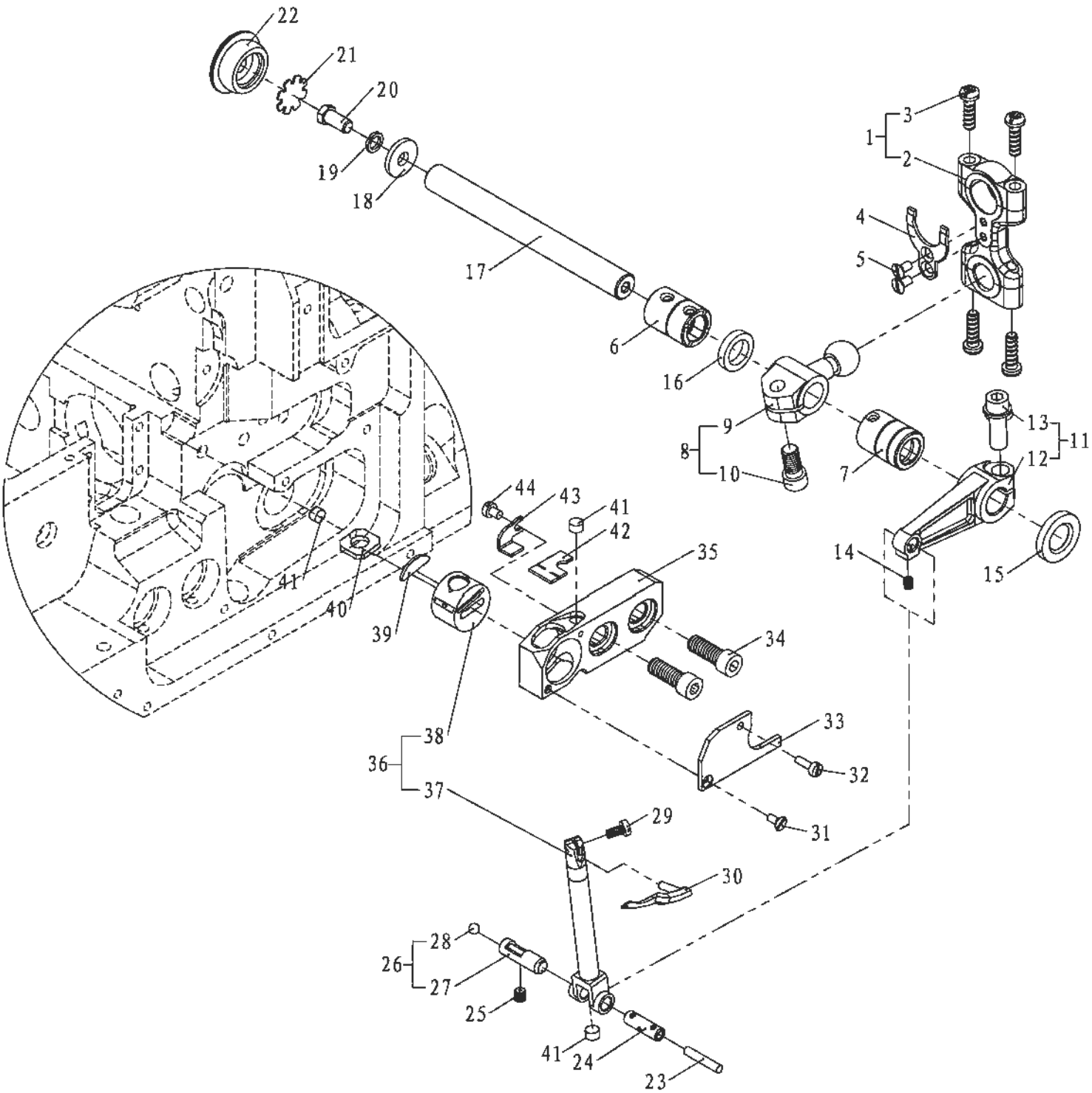
22
21
20
19
18
17
6
16
9
8
10
3
1
2
4
5
7
13
11
12
14
15
44
43
41
42
35
34
41
40
39
38
36
37
33
32
31
29
30
28
26
27
25
41
24
23

7.上弯针传动部分 Upper looper driving mechanism

序号	图号	名称		4线	4线厚料	备注
		中文	英文			
1	201.07-01	弯针球连杆组件	Looper Ball Connecting Rod ASM	1	1	
2	201.07-01-01	弯针球连杆	Looper Ball Connecting Rod	(1)	(1)	
3	01-404001623-1	弯针球连杆螺钉	Screw	(4)	(4)	
4	201.07-03	防震片	Rubber Cushion	1	1	
5	01-103000621-1	螺钉	Screw	2	2	
6	201.07-05	上弯针轴后轴套	Upper Looper Shaft Rear Bushing	1	1	
7	201.07-06	弯针轴前轴套	Looper Shaft Front Bushing	1	1	
8	202.07-07	上弯针球曲柄组件	Upper Looper Ball Crank ASM	1	1	
9	202.07-07-01	上弯针球曲柄	Upper Looper Ball Crank	(1)	(1)	
10	01-506751224-1	上弯针球曲柄螺钉	Upper Looper Ball Crank Screw	(1)	(1)	
11	201.07-09	摇杆曲柄组件	Upper Looper Arm ASM	1	1	
12	201.07-09-01	摇杆曲柄	Upper Looper Arm	(1)	(1)	
13	19-706751225-1	螺钉	Screw	(1)	(1)	
14	01-803000444-1	连杆销固定螺钉	Setscrew	1	1	
15	13-09340190	油封	Oil Seal	1	1	
16	202.07-13	挡圈	Stopping Gasket	1	1	
17	201.07-14	弯针轴	Looper Shaft	1	1	
18	05-053201452-5	弯针轴垫片	Looper Shaft Washer	1	1	
19	07-0521313-1	弹簧垫圈	Spring Washer	1	1	
20	01-705001021-1	六角头开槽螺钉	Screw	1	1	
21	201.07-18	防油片	Oil Proof Spacer	1	1	
22	201.07-19	橡胶帽	Rubber Cap	1	1	
23	201.07-20	油线	Oil Thread	1	1	
24	201.07-21	连杆销轴	Gauge Fixing Pin	1	1	
25	01-804000414-1	机壳销紧定螺钉	Setscrew	1	1	
26	201.07-23	机壳销组件	Pin Components	1	1	
27	201.07-23-01	机壳销	Machine Pin	(1)	(1)	
28	201.07-23-02	钢球	Steel Ball	(1)	(1)	
29	01-935000621-1	上弯针紧定螺钉	Setscrew	1	1	
30	202.07-26	上弯针	Upper Looper	1		
	2102.07-01	上弯针	Upper Looper		1	
31	01-125000621-1	挡板螺钉A	Screw A	1	1	
32	01-525000821-1	挡板螺钉B	Screw B	1	1	
33	201.07-29	摇杆座盖	Upper Looper Gange Cover	1	1	
34	01-506001624-1	上弯针滑杆座螺钉	Screw	2	2	
35	201.07-31	摇杆座	Upper Looper Guide Support	1		
	204.07-31	摇杆座	Upper Looper Guide Support		1	
36	201.07-32	摇杆组件	Upper Looper Holder ASM	1	1	
37	201.07-32-01	摇杆	Upper Looper Holder	(1)	(1)	
38	201.07-32-02	摆轴	Thrust Collar	(1)	(1)	
39	201.07-34	月牙毛毡	Crescent Moon Felt	1	1	
40	201.07-35	油毡	Felt	1	1	
41	201.07-36	油塞	Oil Plug	3	3	
42	201.07-40	毛毡	Felt	1	1	
43	201.07-39	挡片	Stopper	1	1	
44	01-503000421-1	M3X4螺钉	Screw	1	1	

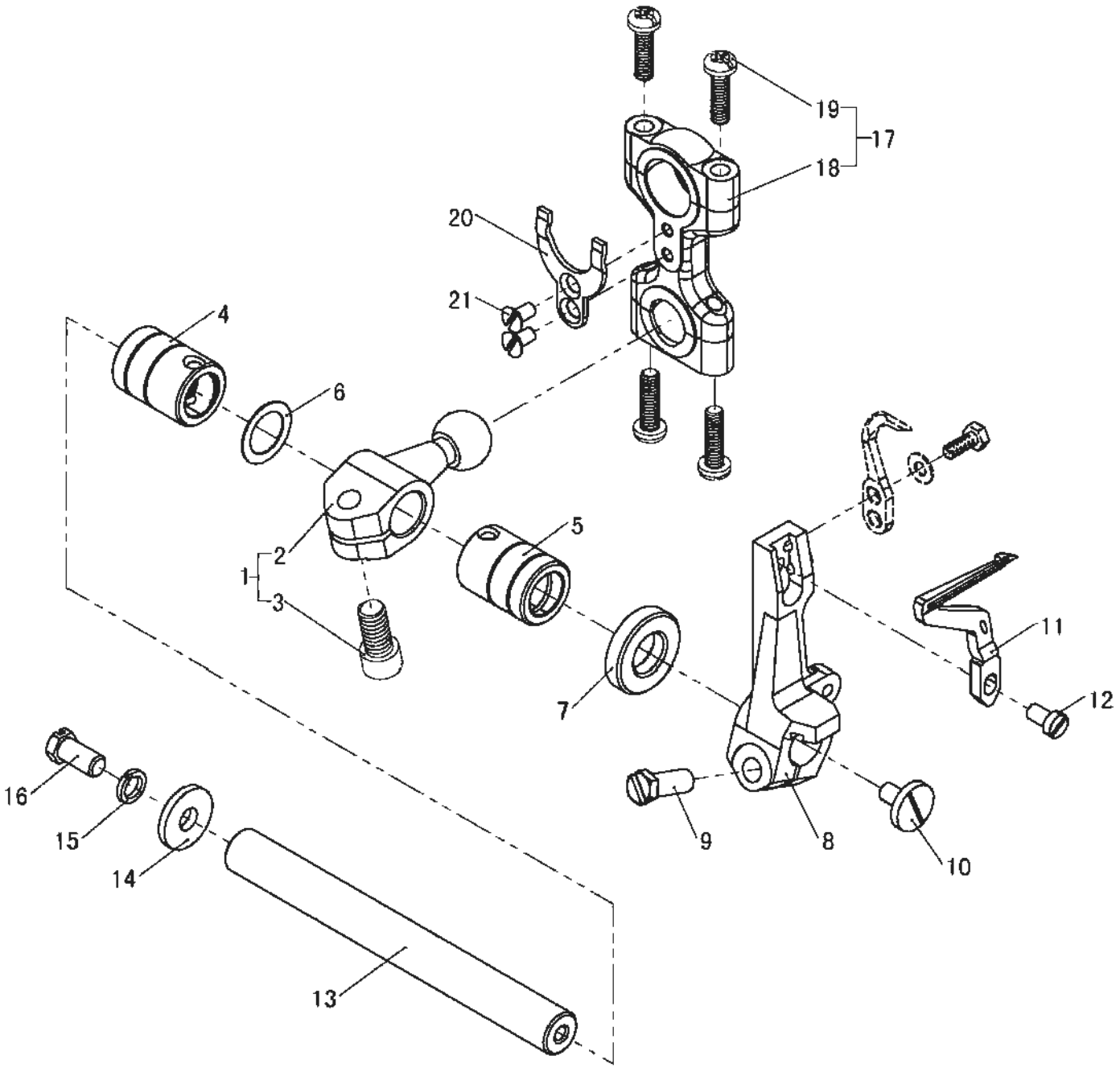
19
17
18
20
21
4
6
2
1
3
5
7
11
12
16
15
14
9
8
10
13

8.下弯针传动部分 Lower looper driving mechanism

序号	图号	名称		4线	4线厚料	备注
		中文	英文			
1	201.08-01	下弯针球曲柄组件	Lower Looper Ball Crank ASM	1	1	
2	201.08-01-01	下弯针球曲柄	Lower Looper Ball Crank	(1)	(1)	
3	01-506751224-1	下弯针球曲柄螺钉(A)	Screw (A)	(1)	(1)	
4	201.07-06	弯针球曲柄后铜套	Rear Copper Collar	1	1	
5	201.07-06	弯针球曲柄前铜套	Front Copper Collar	1	1	
6	201.08-06	铜垫片	Copper Gasket	1	1	
7	13-09340190	油封	Oil Seal	1	1	
8	2101.08-01	下弯针架	Lower Looper Bracket	1	1	
9	01-705001325-1	下弯针架固定螺钉	Lower Looper Bracket Setscrew	1	1	
10	01-604000721-1	螺钉(大帽)	Screw	1	1	
11	202.08-10	下弯针	Lower Looper	1		
	201.08-10	下弯针	Lower Looper		1	
12	01-535000621-1	下弯针固定螺钉	Lower Looper Setscrew	1	1	
13	201.07-14	弯针轴	Looper Shaft	1	1	
14	05-053201452-5	弯针轴垫片	Looper Shaft Gasket	1	1	
15	07-0521313-1	弹簧垫圈	Spring Washer	1	1	
16	01-705001021-1	六角头开槽螺钉	Screw	1	1	
17	201.07-01	弯针球连杆组件	Lopper Ball Rod Components	1	1	
18	201.07-01-01	弯针球连杆	Lopper Ball Rod	(1)	(1)	
19	01-404001623-1	弯针球连杆螺钉	Lopper Ball Rod Screw	(4)	(4)	
20	201.07-03	防震片	Rubber Cushion	1	1	
21	01-103000621-1	螺钉	Screw	2	2	

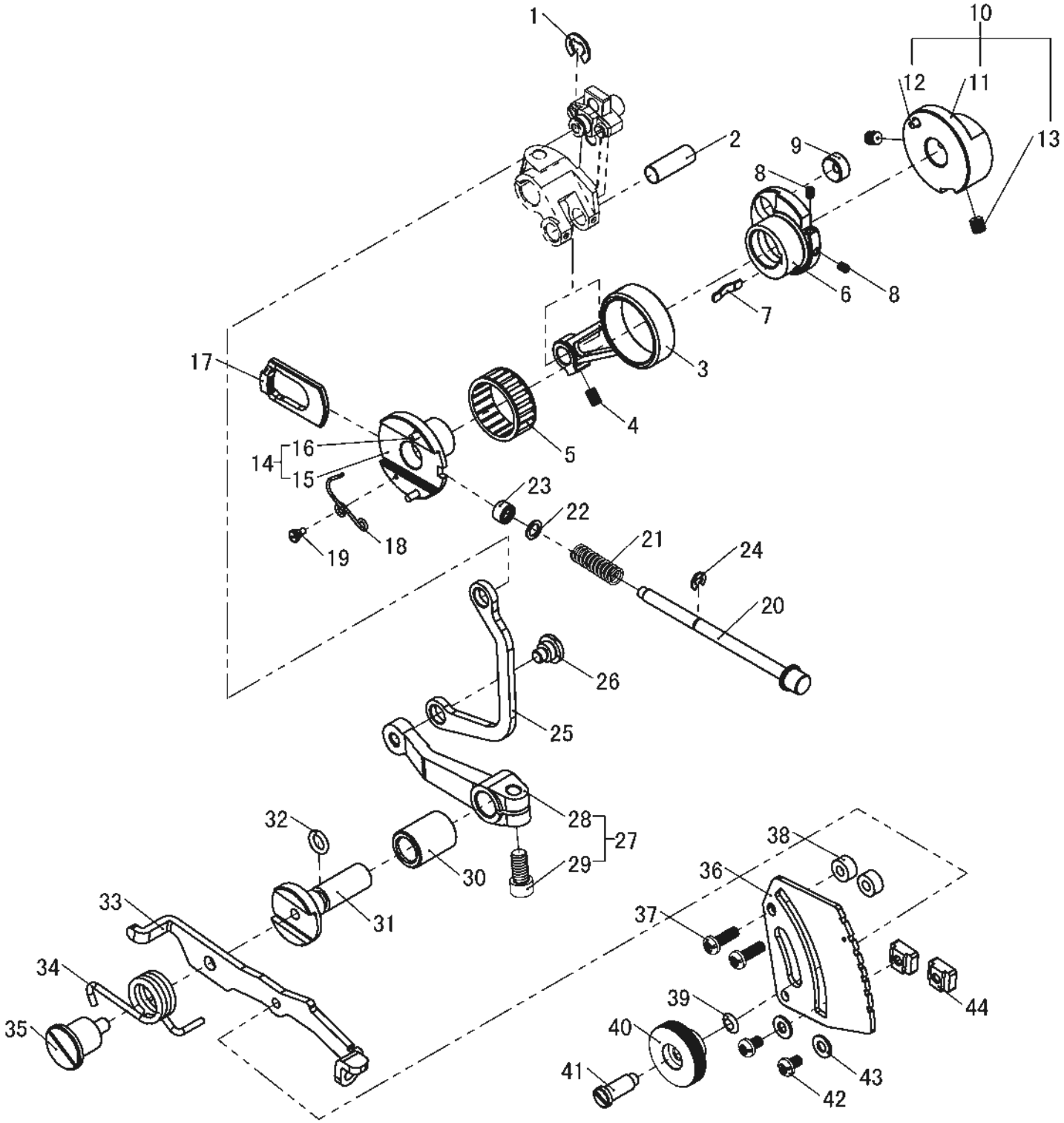
1
2
3
4
5
6
7
8
8
9
10
11
12
13
14
15
16
17
18
19
20
21
22
23
24
25
26
27
28
29
30
31
32
33
34
35
36
37
38
39
40
41
42
43
44

9.针距调节部分 Adjusting of the stitch space mechanism

序号	图号	名称		4线	4线厚料	备注
		中文	英文			
1	06-0600812-1	轴用挡圈	Gasket	1	1	
2	201.05-13	销轴	Pin	1	1	
3	201.09-03	送布连杆	Feeding Connecting Rod	1	1	
4	01-804000614-1	送布连杆紧固螺钉	Setscrew	1	1	
5	201.09-05	送布连杆滚针轴承	Feeding Needle Bearing	1	1	
6	201.09-06	针距凸轮	Cam	1	1	
7	201.09-07	弹簧片	Spring	1	1	
8	01-803000414-1	内六角紧定螺钉	Hexagon Setscrew	2	2	
9	201.09-09	针距凸轮滑块	Cam Block	1	1	
10	201.09-10	针距调节座组件	Adjusting Base Components	1	1	
11	201.09-10-01	针距调节座	Adjusting Base	(1)	(1)	
12	201.09-10-02	定位销	Position Pin	(1)	(1)	
13	01-805000514-1	针距调节座紧定螺钉	Position Pin Setscrew	(2)	(2)	
14	201.09-13	偏心轮组件	Eccentric Wheel Components	1	1	
15	201.09-13-01	偏心轮	Eccentric Wheel	(1)	(1)	
16	201.09-13-02	定位销	Position Pin	(2)	(2)	
17	201.09-15	内齿	Inside Gear	1	1	
18	201.09-16	弹簧	Spring	1	1	
19	201.09-17	压簧固定螺钉	Setscrew	1	1	
20	201.09-18	针距调节轴	Ratio Adjusting Rod	1	1	
21	201.09-19	差动调节簧	Ratio Adjusting Spring	1	1	
22	05-050050760-4	垫片	Gasket	1	1	
23	201.09-21	油封	Oil Seal	1	1	
24	06-0300607-1	开口挡圈	E-ring	1	1	
25	201.09-23	差动调节连杆	Ratio Adjusting Rod	1	1	
26	201.09-24A	差动调节连杆螺钉	Ratio Adjusting Rod Screw	1	1	
27	201.09-25	差动调节曲柄组件	Ratio Adjusting Crank ASM	1	1	
28	201.09-25-01	差动调节曲柄	Ratio Adjusting Crank	(1)	(1)	
29	01-506751224-1	固定螺钉	Setscrew	(1)	(1)	
30	201.09-27	差动轴套	Ratio Bushing	1	1	
31	201.09-28	差动轴	Ratio Shaft	1	1	
32	12-060200	0型圈	O-ring	1	1	
33	201.09-30	差动调节杠杆	Ratio Adjusting Lever	1	1	
34	201.09-31	差动扳手簧	Ratio Spanner Spring	1	1	
35	201.09-32	差动扳手固定螺钉	Ratio Spanner Setscrew	1	1	
36	201.09-33	针距调节指示板	Adjusting Indicater	1	1	
37	01-404001223-1	固定螺钉	Setscrew	2	2	
38	201.09-35	固定垫圈	Spacer	2	2	
39	09-0620513-1	弹性垫圈（碟形）	Elastic Spacer (Dish-Live)	1	1	
40	201.09-37	差动调节螺母	Ratio Adjusting Nut	1	1	
41	201.09-38	差动调节螺钉	Ratio Adjusting Screw	1	1	
42	01-404000623-1	定位螺钉	Setscrew	2	2	
43	05-043080900-4	垫片	Spacer	2	2	
44	201.09-41	定位螺母	Nut	2	2	

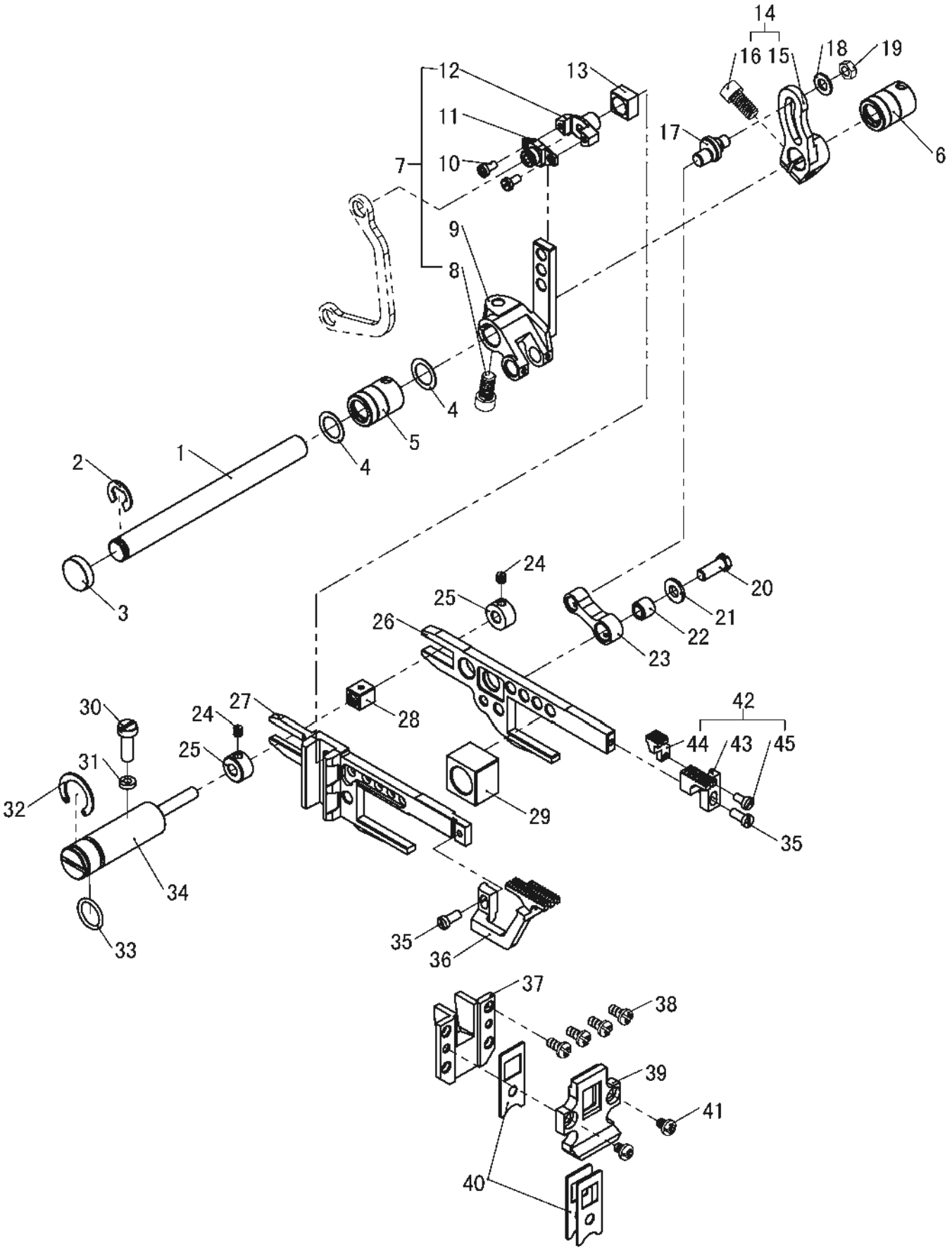
14
16
15
18
19
12
13
11
17
6
7
10
9
8
4
5
4
2
1
3
24
20
25
21
26
22
23
30
27
24
28
42
44
43
45
25
31
29
32
35
34
35
36
33
37
38
39
41
40

10.送布传动部分 Feed transmit mechanism

序号	图号	名称		4线	4线厚料	备注
		中文	英文			
1	201.10-01	送布轴	Feed Rocker Shaft	1	1	
2	06-0700814-4	开口挡圈	E-ring	1	1	
3	22-15004000	油封	Oil Seal	1	1	
4	201.08-06	铜垫片	Copper Gasket	2	2	
5	201.07-06	送布轴前轴套	Feed Rocker Shaft Front Bushing	1	1	
6	201.07-06	送布轴后轴套	Feed Rocker Shaft Rear Bushing	1	1	
7	201.10-07	差动牙架调整曲柄组件	Ratio Adjusting Crank ASM	1	1	
8	01-506751224-1	差动牙架调整曲柄螺钉	Ratio Adjusting Crank Screw	(1)	(1)	
9	201.10-07-02	差动牙架调整曲柄	Ratio Adjusting Crank	(1)	(1)	
10	01-503000621-1	滑块盖板螺钉	Slipper Block Screw	(2)	(2)	
11	201.10-07-04	差动送布滑块盖板	Slipper Block Cover	(1)	(1)	
12	201.10-07-05	差动牙架调整曲柄滑块	Crank Block	(1)	(1)	
13	201.10-08	滑块	Slipper Block	1	1	
14	201.10-09	送布调整曲柄组件	Feed Cloth Adjusting Crank ASM	1	1	
15	201.10-09-01	送布调整曲柄	Feed Cloth Adjusting Crank	(1)	(1)	
16	01-506751224-1	送布调整曲柄紧固螺钉	Setscrew	(1)	(1)	
17	201.10-11	偏心轴	Eccentric Cam	1	1	
18	05-053101001-5	垫片	Gasket	1	1	
19	03-605000400-1	送布牙连杆偏心轴螺母	Nut	1	1	
20	01-705051325-1	送布牙架连杆套螺钉	Screw	1	1	
21	05-053151102-5	送布牙架连杆套垫圈	Gasket	1	1	
22	201.10-16	送布牙架连杆套	Connecting Rod Bushing	1	1	
23	201.10-17	送布牙架连杆	Connecting Rod	1	1	
24	01-804000414-1	挡圈螺钉	Screw	2	2	
25	201.10-19	轴箍	Thrust Collar	2	2	
26	201.10-20	送布牙架	Feed Rocker Rank	1	1	
27	201.10-21	差动牙架	Ratio Rank	1	1	
28	201.10-22	差动送布滑块	Feed Slipper Block	1	1	
29	201.10-23	抬牙滑块	Take-up Slipper Block	1	1	
30	01-504000624-1	螺钉	Screw	1	1	
31	201.10-25	油封	Oil Seal	1	1	
32	10-1401014-1	挡圈	E-ring	1	1	
33	12-115160	0型圈	O-ring	1	1	
34	201.10-28	牙叉轴	Shaft	1	1	
35	01-535000821-1	差动牙螺钉	Screw	2	2	
36	201.10-30	差动牙	Ratio dog	1	1	
37	201.10-31	牙架导轨	Guide Orbit	1	1	
38	01-404000823-1	牙架导轨螺钉	Screw	4	4	
39	201.10-33	密封导架	Guide Bracket	1	1	
40	201.10-34	油封	Oil Seal	3	3	
41	01-404000523-1	密封导架螺钉	Screw	2	2	
42	201.10-36	主送布牙组件	Main Feed Dog Components	1	1	
43	201.10-36-01	主送布牙	Main Feed Dog	(1)	(1)	
44	201.10-36-02	副送布牙	Differential Feed Dog	(1)	(1)	
45	01-503000621-1	副送布牙螺钉	Screw	(1)	(1)	

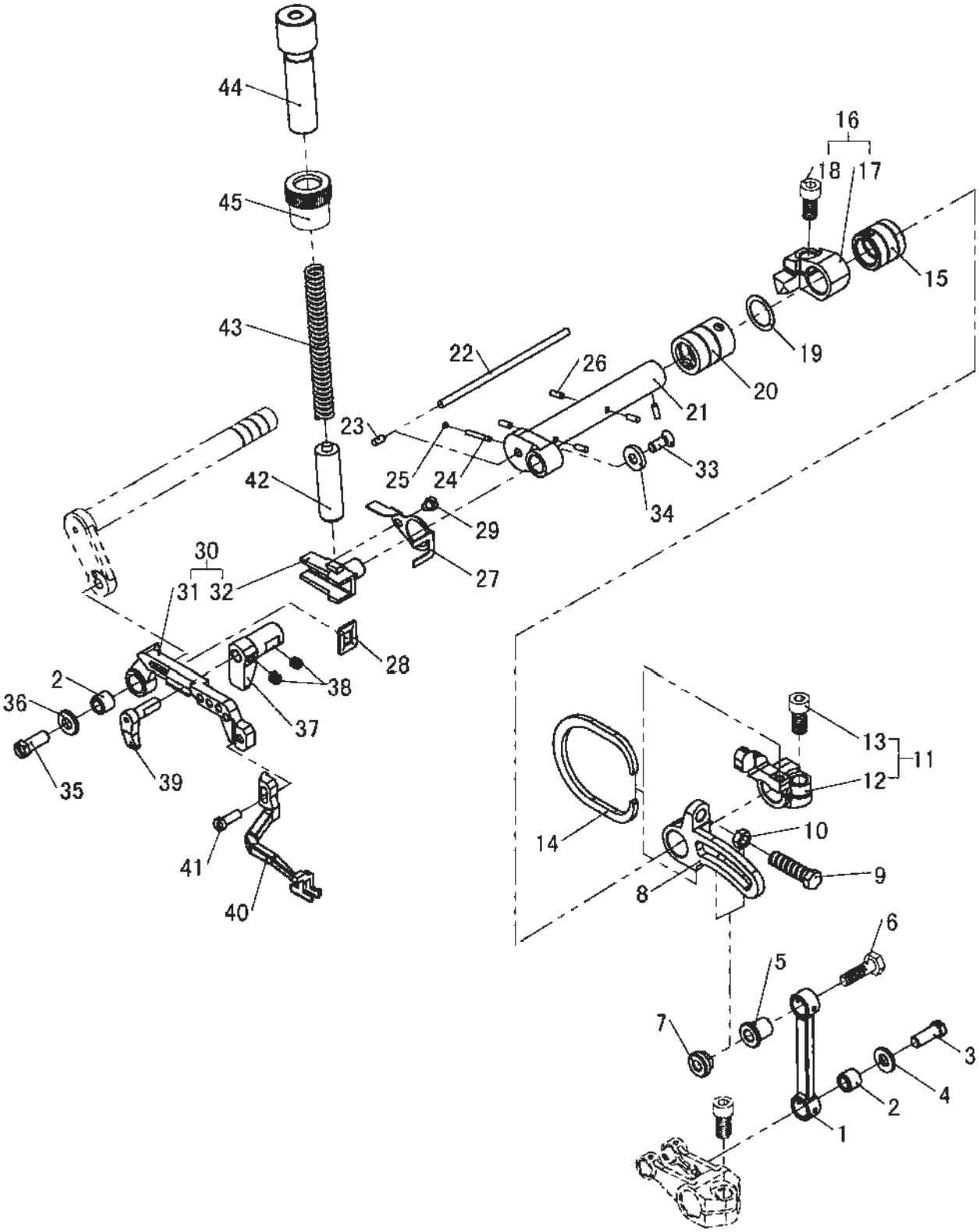
44
45
43
42
16
18
17
15
19
20
21
22
26
23
25
24
33
34
29
27
30
31
32
28
2
36
35
38
37
39
41
40
13
11
12
14
10
9
8
6
5
7
3
4
2
1

11.上送布传动部分(1) Top feed transmit mechanism(1)

序号	图号	名称		4线	4线厚料	备注
		中文	英文			
1	2101.11-01	连杆	Link	1	1	
2	201.10-16	套筒	Bushing	2	2	
3	01-705051325-1	M5×13六角螺钉	Screw	1	1	
4	05-053151102-5	平垫片	Washer	1	1	
5	2101.11-03	轴套	Bushing	1	1	
6	19-705051725-1	螺栓 M5x17	Bolt	1	1	
7	2101.11-04	限位螺母	Nut	1	1	
8	2101.11-05	调节曲柄	Crank	1	1	
9	01-706002255-1	螺栓 M6x22	Bolt	1	1	
10	03-606000400-1	六角螺母	Nut	1	1	
11	2101.11-06	挡套组件	Collar ASM	1	1	
12	2101.11-06-01	挡套	Collar	(1)	(1)	
13	01-506751224-1	M6x12螺钉	Screw	(1)	(1)	
14	2101.11-07	C型弹簧	Flat spring	1	1	
15	2101.05-03	曲柄轴后套筒	Bushing	1	1	
16	2101.11-09	限位挡圈组件	Collar ASM	1	1	
17	2101.11-09-01	限位挡圈	Collar	(1)	(1)	
18	01-506751224-1	螺栓 M6x12	Screw	(1)	(1)	
19	201.05-08	铜垫片	Washer	1	1	
20	2101.11-13	曲柄轴前轴套	Bushing	1	1	
21	2101.11-14	曲柄轴	Crankshaft	1	1	
22	2101.11-15	油线	Oil wick	1	1	
23	2101.11-16	插销	Pin	1	1	
24	2101.11-17	油毡	Oil felt	1	1	
25	2101.11-18	油塞	Plug	1	1	
26	2101.11-19	油毡	Oil felt	5	5	
27	2101.11-20	送料轴油封导架	Guide/Feed Bar Oil Seal	1	1	
28	2101.11-21	油封	Oil seal	1	1	
29	01-503000321-1	M3×3螺钉	Screw	1	1	
30	2101.11-22	上送布架组件	Top Feed Bar Assebly	1	1	
31	2101.11-22-01	上送布牙架	Top Feed Bar	(1)	(1)	
32	2101.11-22-02	上送布牙架导向	Guide	(1)	(1)	
33	01-104001021-1	M4×10螺钉	Screw	1	1	
34	2101.11-23	平垫片	Washer	1	1	
35	01-705051325-1	M5×13螺钉	Screw	1	1	
36	05-053151102-5	平垫片	Washer	1	1	
37	2101.11-24	上送布牙架限位座	Guide/Top Bar Oil Seal	1	1	
38	01-804000414-1	M4×4螺钉	Screw	2	2	
39	2101.11-25	上送布牙架限位头	Guide/Top Bar Oil Seal	1	1	
40	2101.11-26	上送布牙	Top Feed Bar	1		
	2102.11-26	上送布牙	Top Feed Bar		1	
41	01-535001021-1	M3.5×10螺钉	Screw	1	1	
42	2101.11-27	压杆头	Presser Bar	1	1	
43	2101.11-28	调压簧	Spring	1	1	
44	2101.11-29	调节螺钉	Screw	1	1	
45	2101.11-30	调节螺母锁紧套	Nut	1	1	

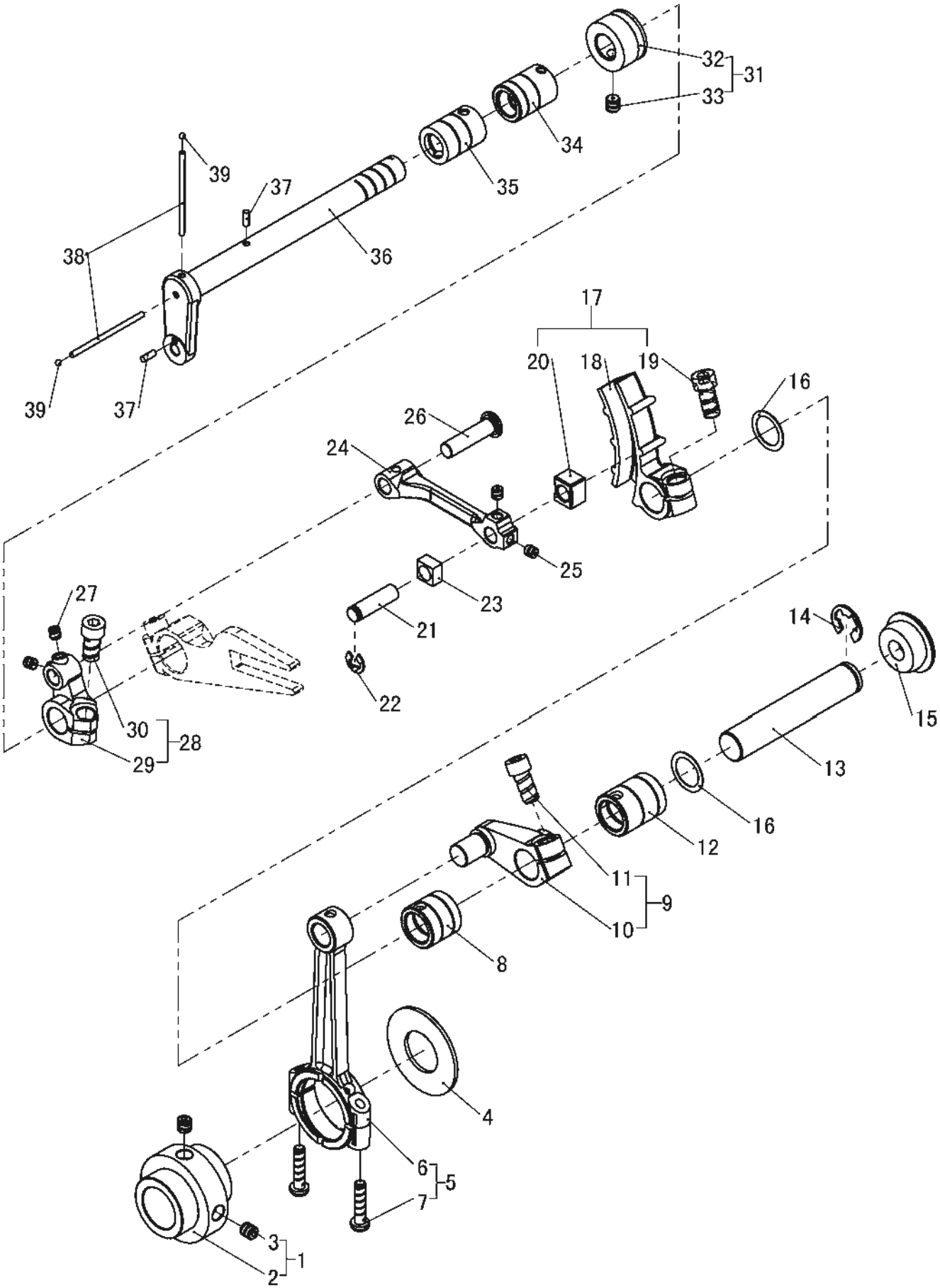
32
31
33
34
35
39
37
36
38
39
37
17
20
18
19
16
26
24
25
23
21
22
27
30
28
29
14
15
13
16
12
11
9
10
8
4
6
5
7
3
1
2

12.上送布传动部分(2) Top feed transmit mechanism(2)

序号	图号	名称		4线	4线厚料	备注
		中文	英文			
1	2101.12-01	上送前后偏心凸轮组件	Eccentric ASM	1	1	
2	2101.12-01-01	偏心凸轮	Eccentric	(1)	(1)	
3	01-805000514-1	M5×5螺钉	Screw	(2)	(2)	
4	2101.12-02	平垫片	Washer	1	1	
5	2101.12-04	上送布传动连杆组件	Connection ASM	1	1	
6	2101.12-04-01	上送布传动连杆	Connection	(1)	(1)	
7	01-404001823-1	M4×18螺钉	Screw	(2)	(2)	
8	2101.05-03	机针传动轴后套筒	Bushing	1	1	
9	2101.12-05	上送传动曲柄组件	Crank ASM	1	1	
10	2101.12-05-01	上送传动曲柄	Crank	(1)	(1)	
11	01-506751224-1	M6×12螺钉	Screw	(1)	(1)	
12	201.05-07	后套筒	Bushing	1	1	
13	2101.12-07	上送传动轴	Rod	1	1	
14	06-0800816-1	卡簧	Ring	1	1	
15	22-19807024	橡胶塞	Plug	1	1	
16	201.05-08	平垫片	Washer	2	2	
17	2101.12-08	差动曲柄组件	Crank Assebly	1	1	
18	2101.12-08-01	差动曲柄	Crank	(1)	(1)	
19	01-506751224-1	M6×12螺钉	Screw	(1)	(1)	
20	2101.12-08-02	差动曲柄滑块	Block	(1)	(1)	
21	2101.12-09	滑块销	Pin	1	1	
22	06-0400609-1	卡簧	Ring	1	1	
23	2101.12-10	差动连杆滑块	Block	1	1	
24	2101.12-11	上送连杆	Link	1	1	
25	01-804000414-1	M4×4螺钉	Screw	2	2	
26	2101.12-12	上送连杆销	Pin	1	1	
27	01-804000414-1	M4×4螺钉	Screw	2	2	
28	2101.12-13	上送曲柄组件	Crank Assebly	1	1	
29	2101.12-13-01	上送曲柄	Crank	(1)	(1)	
30	01-506751224-1	M6x12螺钉	Screw	(1)	(1)	
31	2101.12-14	轴套组件	Collar	1	1	
32	2101.12-14-01	轴套	Collar	(1)	(1)	
33	01-805000514-1	M5×5螺钉	Screw	(1)	(1)	
34	201.07-06	上送布轴后套筒	Bushing	1	1	
35	2101.12-16	上送布轴前套筒	Bushing	1	1	
36	2101.12-17	上送布轴	Crankshaft	1	1	
37	2101.11-19	油毡	Oil felt	2	2	
38	2101.12-19	油毡	Oil felt	2	2	
39	2101.11-18	油塞	Plug	2	2	

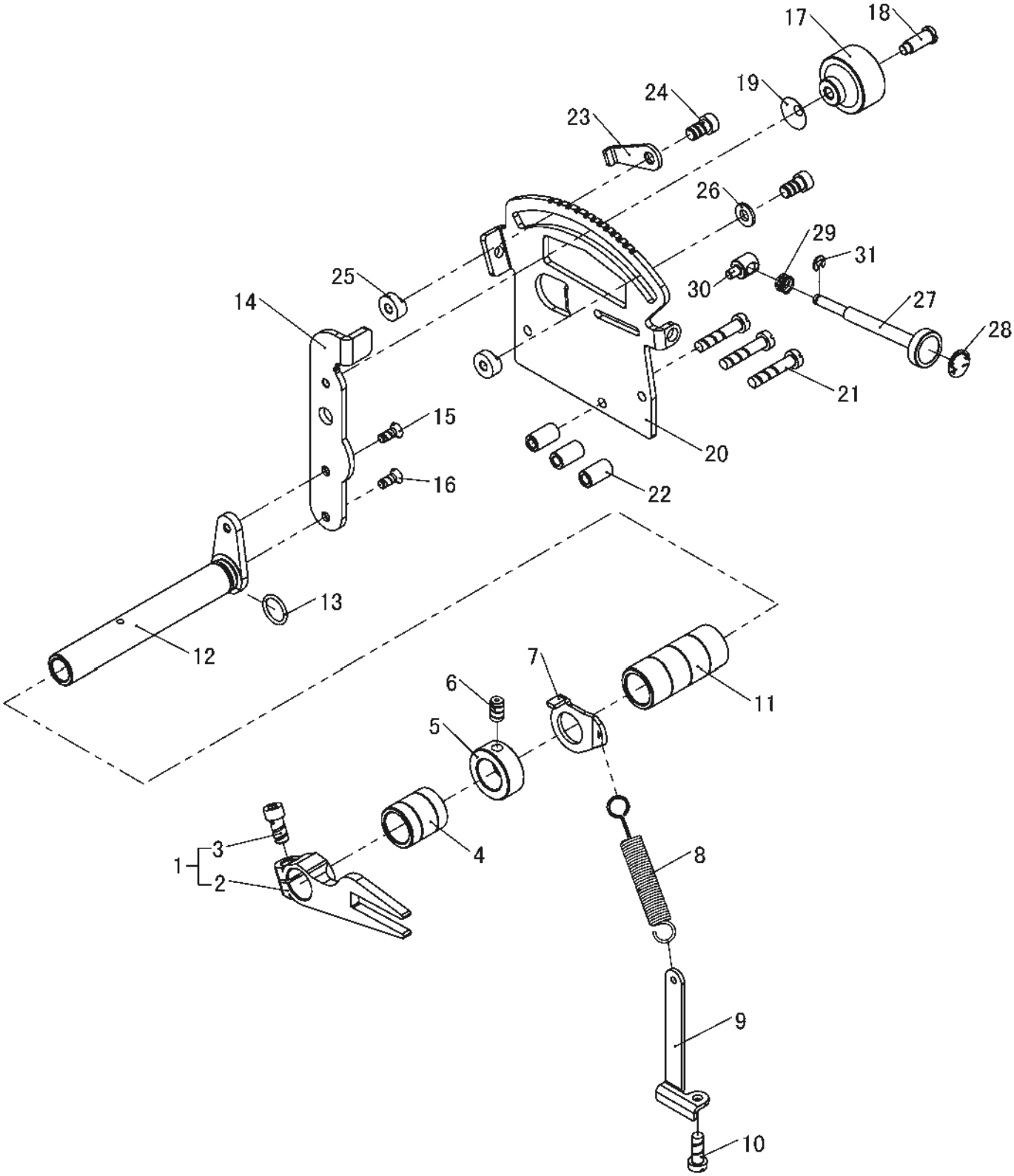
17
18
19
24
23
26
29
31
25
30
27
14
28
21
15
20
16
22
13
12
7
6
11
5
3
1
2
4
8
9
10

13.上送布传动部分(3) Top feed transmit mechanism(3)

序号	图号	名称		4线	4线厚料	备注
		中文	英文			
1	2101.13-01	上送差动连杆组件	Lever ASM	1	1	
2	2101.13-01-01	差动连杆	Lever	(1)	(1)	
3	01-506751224-1	M6x12螺钉	Screw	(1)	(1)	
4	2101.13-02	连杆前轴套	Bushing	1	1	
5	2101.13-03	挡圈	Collar	1	1	
6	01-806001014-1	M6×10螺钉	Screw	1	1	
7	2101.13-04	拉簧连接板	Latch	1	1	
8	2101.13-05	拉簧	Spring	1	1	
9	2101.13-06	固定板	Latch	1	1	
10	01-504000821-1	M4×8螺钉	Screw	1	1	
11	2101.13-07	连杆后轴套	Bushing	1	1	
12	2101.13-08	上送差动轴	Rod	1	1	
13	12-115160	O型圈	O Ring	1	1	
14	2101.13-09	连接板	Lever	1	1	
15	01-104000621-1	M4×6螺钉	Screw	1	1	
16	01-104001021-1	M4×10螺钉	Screw	1	1	
17	2101.13-10	螺母	Nut	1	1	
18	201.09-38	螺钉4.5	Screw	1	1	
19	09-0620513-1	波形垫片	Spring Washer	1	1	
20	2101.13-11	调节板	Blade Guide	1	1	
21	01-504002524-1	M4×25螺钉	Screw	3	3	
22	2101.13-12	套筒	Spacer	3	3	
23	2101.13-13	挡板	Stopper	1	1	
24	01-505001024-1	M5×10螺钉	Screw	2	2	
25	2101.13-14	螺母	Nut	2	2	
26	05-053151102-5	平垫片	Washer	1	1	
27	2101.13-15	差动微调杆	Adjusting Bar	1	1	
28	2101.13-16	标识	Seal	1	1	
29	2101.13-17	弹簧	Spring	1	1	
30	2101.13-18	销	Pin	1	1	
31	06-0300607-1	卡簧	Ring	1	1	

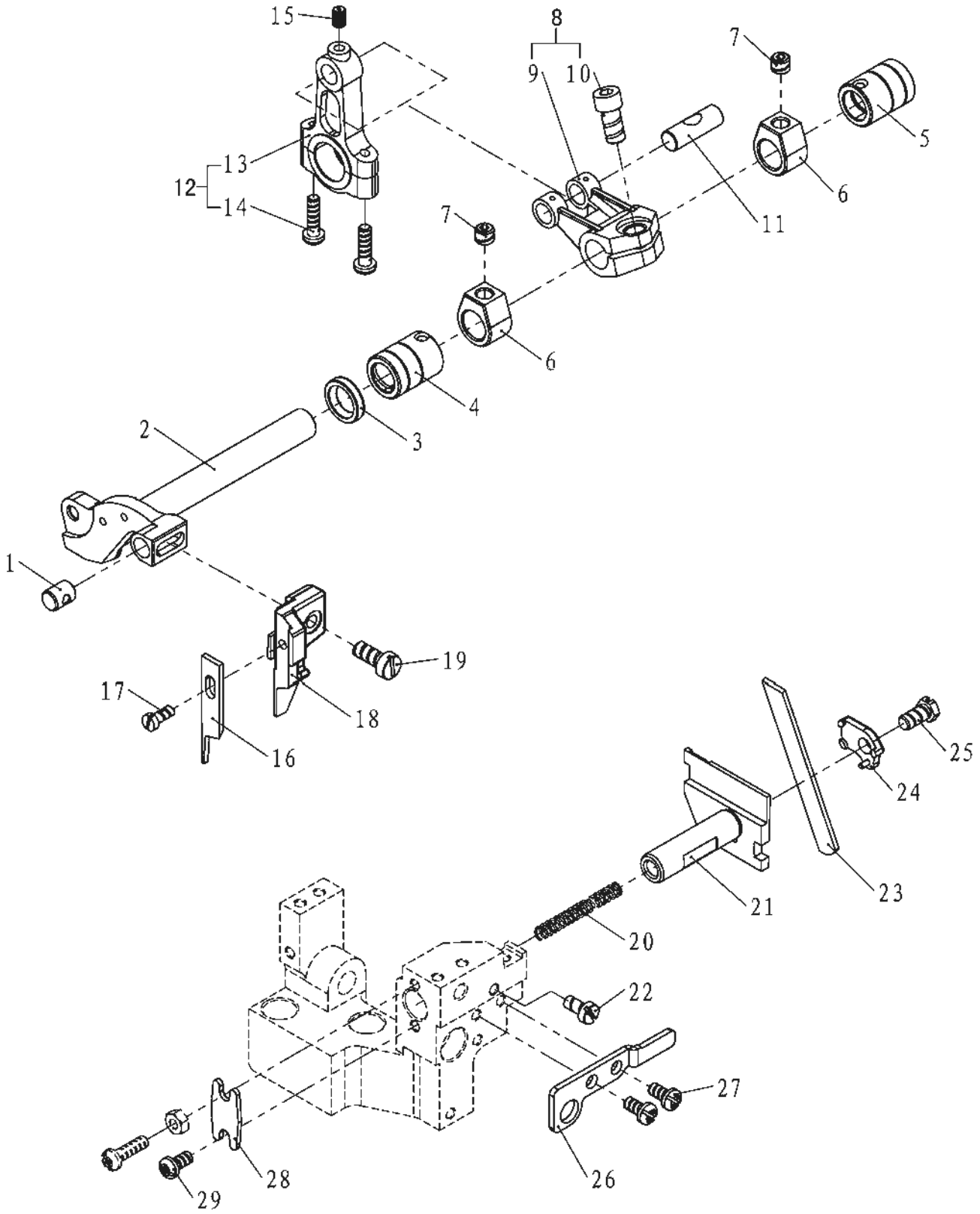
15
8
9
10
7
5
13
12
14
6
11
7
6
4
3
2
1
19
17
18
16
25
24
23
21
20
22
27
28
29
26

14.剪切部分 Thread trimmer mechanism

序号	图号	名称		4线	4线厚料	备注
		中文	英文			
1	201.11-01	销轴	Pin	1	1	
2	2111.10-01	上刀轴	Upper Knife Shaft	1	1	
3	13-09330150	油封	Oil Seal	1	1	
4	201.07-06	套筒	Bushing	1	1	
5	201.07-06	套筒	Bushing	1	1	
6	201.11-06	上刀轴箍	Crank Pin	2	2	
7	01-806750514-1	挡圈螺钉	Screw	2	2	
8	2101.14-02	上切刀曲柄组件	Feed Forked Arm Components	1	1	
9	2101.14-02-01	上切刀曲柄	Feed Forked Arm	(1)	(1)	
10	01-506751224-1	螺钉M6x12	Screw	(1)	(1)	
11	201.05-13	销轴	Pin	1	1	
12	201.11-11	上刀连杆组件	Connecting Rod ASM	1	1	
13	201.11-11-01	上刀连杆	Feed Forked Connecting Rod	(1)	(1)	
14	01-404001623-1	上切刀传动连杆固定螺钉	Setscrew	(2)	(2)	
15	01-804000614-1	上切刀传动连杆紧定螺钉	Setscrew	1	1	
16	201.11-14	上切刀	Upper Knife	1	1	
17	01-535000821-1	上切刀固定螺钉	Setscrew	1	1	
18	201.11-16	上刀座	Plain Knife Support	1	1	
19	01-504001221-1	上切刀架固定螺钉	Setscrew	1	1	
20	201.11-18	下切刀弹簧	Lower Knife Spring	1	1	
21	201.11-19	下切刀架	Lower Knife Slide Stud	1	1	
22	01-504000821-1	下切刀架固定螺钉	Setscrew	1	1	
23	201.11-21	下切刀	Lower Knife	1	1	
24	201.11-22	下切刀压板	Lower Knife Presser Board	1	1	
25	01-705000821-1	下切刀固定螺钉	Setscrew	1	1	
26	201.11-24	下切刀架支板	Lower Knife Bracket Support	1	1	
27	01-404000823-1	下切刀架定位板固定螺钉	Setscrew	2	2	
28	201.11-26	弹簧挡板	Spring Plate	1	1	
29	01-404000823-1	弹簧挡板固定螺钉	Spring Plate Setscrew	2	2	

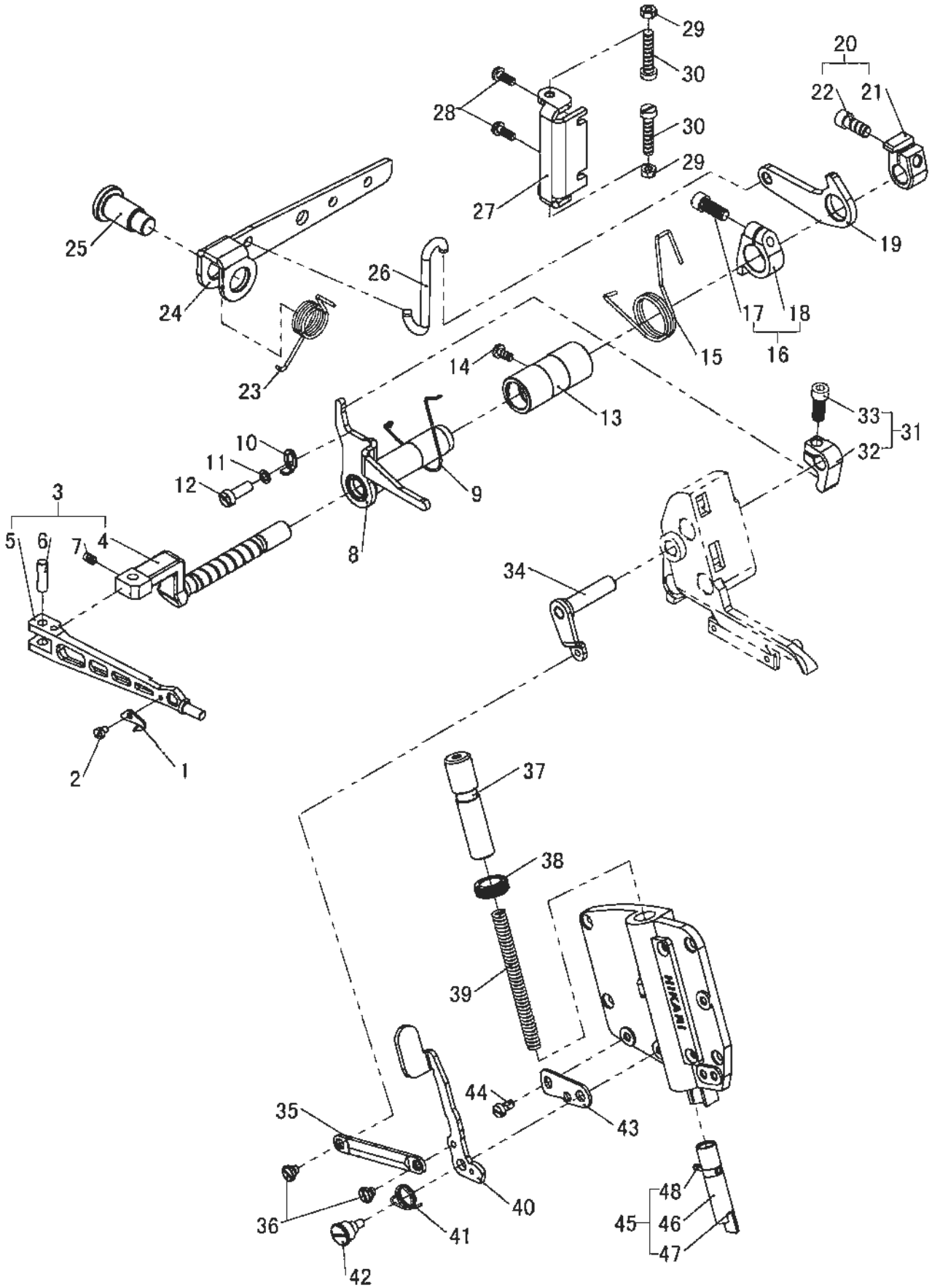
29
30
20
22
21
28
30
29
27
19
25
26
24
17
18
16
15
14
23
13
33
31
32
10
11
12
9
3
5
6
7
4
8
34
2
1
37
38
39
HIKARI
44
43
35
40
48
45
46
47
36
41
42

15.压布传动部分 Presser foot driving mechanism

序号	图号	名称		4线	4线厚料	备注
		中文	英文			
1	201.13-25	割线刀	Thread Cutting Knife	1	1	
2	01-503000421-1	割线刀螺钉	Thread Cutting Knife Screw	1	1	
3	201.13-02A	抬压脚组件	Lifting Presser Foot ASM	1	1	
4	201.13-02A-01	抬压脚轴	Lifting Presser Foot Shaft	(1)	(1)	
5	201.13-02A-02	抬压脚臂	Lifting Presser Foot Arm	1	1	
6	201.13-02A-03	铰链销	Hinge Pin	1	1	
7	01-804000614-1	铰链销紧定螺钉	Hinge Pin Setscrew	1	1	
8	2101.15-01	抬牙杠杆	Lever	1	1	
9	2101.15-02	弹簧	Spring	1	1	
10	2101.15-03	定位片	Stopper	1	1	
11	09-0420408-1	平垫片	Spring Washer	1	1	
12	01-504000621-1	M4×6螺钉	Screw	1	1	
13	2101.15-04	压脚轴套	Presser Foot Bushing	1	1	
14	01-404000823-1	压脚轴套紧定螺钉	Presser Foot Bushing Setscrew	1	1	
15	2101.15-05	扭簧	Twisting Spring	1	1	
16	2101.15-06	挡圈组件	Collar ASM	1	1	
17	2101.15-06-01	挡圈	Collar	(1)	(1)	
18	01-505001424-1	螺钉 M5x14	Screw	(1)	(1)	
19	201.13-12	抬压脚轴杠杆	Lifting Presser Foot Shaft Lever	1	1	
20	201.13-13	抬压脚曲柄组件	Lifting Presser Foot Crank ASM	1	1	
21	201.13-13-1	抬压脚曲柄	Lifting Presser Foot Crank	(1)	(1)	
22	01-506751424-1	抬压脚曲柄螺钉	Lifting Presser Foot Crank Screw	(1)	(1)	
23	201.13-15	杠杆弹簧	Adjusting Lever Spring	1	1	
24	201.13-16	抬压脚杠杆	Lifting Lever Link	1	1	
25	201.13-17	抬压脚杠杆轴位螺钉	Lifting Lever Link Screw	1	1	
26	2101.15-07	吊钩	Lifting Hook	1	1	
27	201.13-19G	抬压脚杠杆限位板	Lifting Level Link Limited Board	1	1	
28	01-404001023-1	固定螺钉	Setscrew	2	2	
29	01-505002421-1	调节螺钉	Presser Spring Regulation	2	2	
30	03-605000400-1	调节螺母	Nut	2	2	
31	2101.15-08	杠杆组件	Lever ASM	1	1	
32	2101.15-08-01	杠杆	Lever	(1)	(1)	
33	01-505001224-1	M5×12螺钉	Screw	(1)	(1)	
34	2101.15-09	连杆轴	Lever	1	1	
35	2101.15-10	连杆	Link	1	1	
36	2101.15-11	轴台螺钉	Screw	2	2	
37	2101.15-12	调压螺钉	Presser Screw Regulation	1	1	
38	2101.15-13	调压螺母	Nut Regulation Collar	1	1	
39	2101.15-14	调压簧	Presser Spring	1	1	
40	2101.15-15	抬压脚扳手	Spanner	1	1	
41	201.13-31	抬压脚扳手簧	Spanner Spring	1	1	
42	201.13-32	抬压脚扳手固定螺钉	Setscrew	1	1	
43	2101.15-16	压板	Presser Board	1	1	
44	01-604000821-1	压板固定螺钉	Setscrew	1	1	
45	2101.15-17	压杆头组件	Presser Rod Head ASM	1	1	
46	2101.15-17-01	压杆头	Presser Rod Head	(1)	(1)	
47	2101.15-17-02	压杆头升降固定销	Lifting Pin	(1)	(1)	
48	2101.15-17-03	压杆头固定塑料销	Plastic Pin	(1)	(1)	

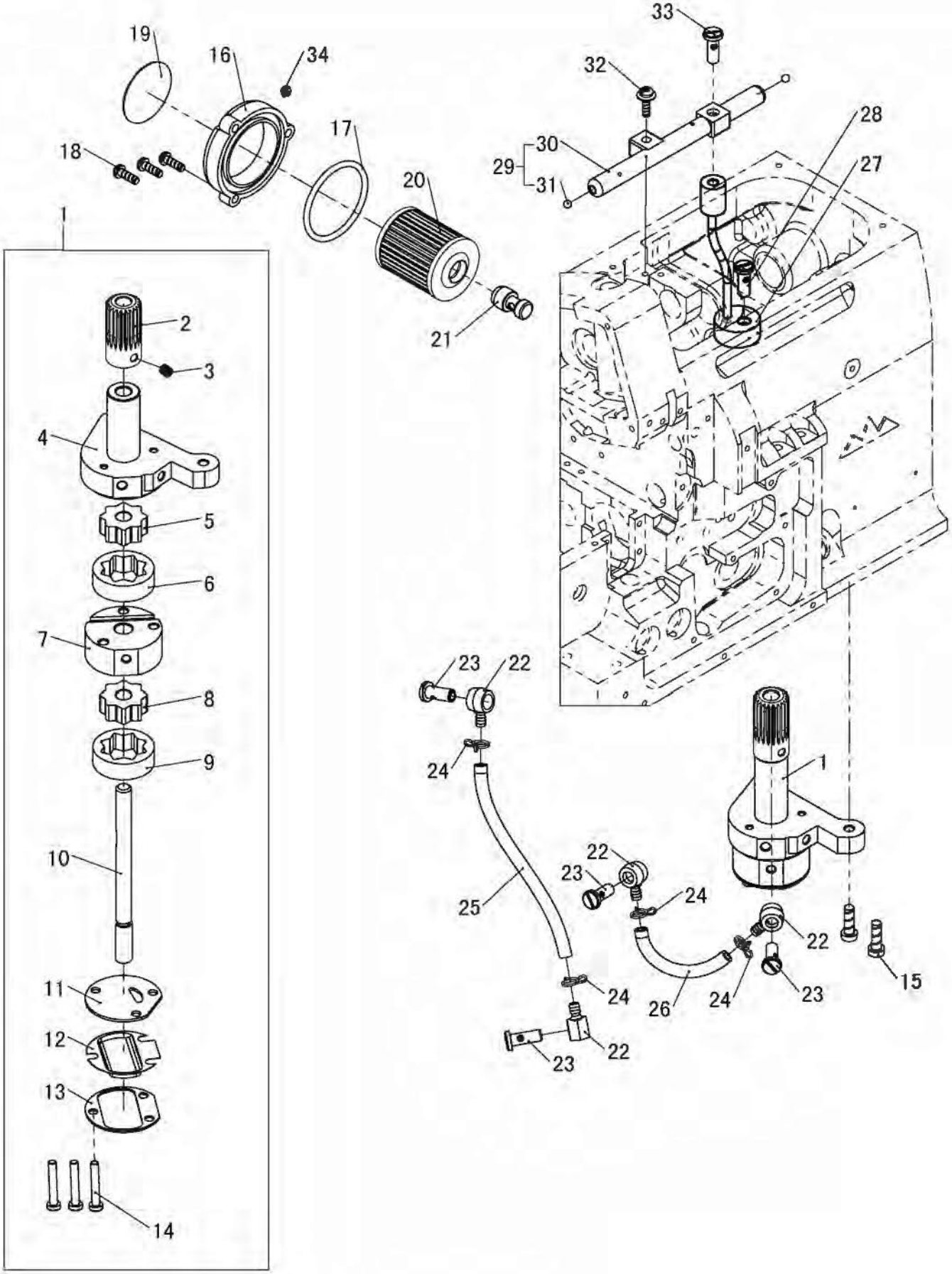
19
16
34
18
17
20
21
1
2
3
4
5
6
7
8
9
10
11
12
13
14
33
32
28
30
29
31
27
23
22
24
25
26
15

16. 润滑部分 Lubrication component

序号	图号	名称		4线	4线厚料	备注
		中文	英文			
1	210.14-00	油泵组件	Oil Pump ASM	1	1	
2	201.14-01-01	油泵蜗轮	Worm Gear	(1)	(1)	
3	01-805000514-1	油泵蜗轮紧定螺钉	Worm Gear Setscrew	(1)	(1)	
4	201.14-01-03	油泵体	Oil Pump	(1)	(1)	
5	201.14-01-04	油泵转子	Pinion Gear	(2)	(2)	
6	201.14-01-05	油泵定子	Oil Pump Pinion	(2)	(2)	
7	210.14-01-06	油泵底座	Oil Pump Base	(1)	(1)	
8	210.14-01-04	大油泵转子	Pinion Gear	(1)	(1)	
9	210.14-01-05	大油泵定子	Oil Pump Pinion	(1)	(1)	
10	201.14-01-07	油泵主轴	Gear Pump Shaft Large	(1)	(1)	
11	201.14-01-08	油泵底板	Pinion Spacer	(1)	(1)	
12	201.14-01-09	滤油网	Filter	(1)	(1)	
13	201.14-01-10	滤油网固定片	Filter Gasket	(1)	(1)	
14	201.14-01-11	油泵底板固定螺钉	Setscrew	(3)	(3)	
15	01-504001621-1	螺钉	Screw	2	2	
16	351.17-05	过滤器盖	Oil Finding Cap	1	1	
17	12-390350	O型圈	O Ring	1	1	
18	01-404001223-1	M4×12螺钉	Screw	3	3	
19	201.02-37	过滤器标识	Filter Seal	1	1	
20	201.14-05	滤油器	Cartridge Filter	1	1	
21	2101.16-05	滤油器连接头	Joint	1	1	
22	201.14-10	油管接头	Oil Pipe Joint	4	4	
23	201.14-11	油管活接头螺钉	Screw	4	4	
24	201.20-08	油管卡簧	Oil Pipe Spring	4	4	
25	2101.16-01	主轴供油管	Oil Pipe	1	1	
26	2101.16-02	滤油器供油管	Oil Pipe	1	1	
27	2101.16-03	油管导引装置	Oil Distributor	1	1	
28	201.14-11	油管连接螺钉	Screw	1	1	
29	2101.16-04	油分配器组件	Oil Distributor Complete	1	1	
30	2101.16-04-01	油分配器	Oil Distributor	(1)	(1)	
31	2101.16-04-02	塞	Plug	(2)	(2)	
32	18-404001623-3	M4×16螺钉组件	Washer	1	1	
33	201.14-11	油管连接头螺钉	Screw	1	1	
34	22-08003010	橡胶塞	Plug	1	1	

17

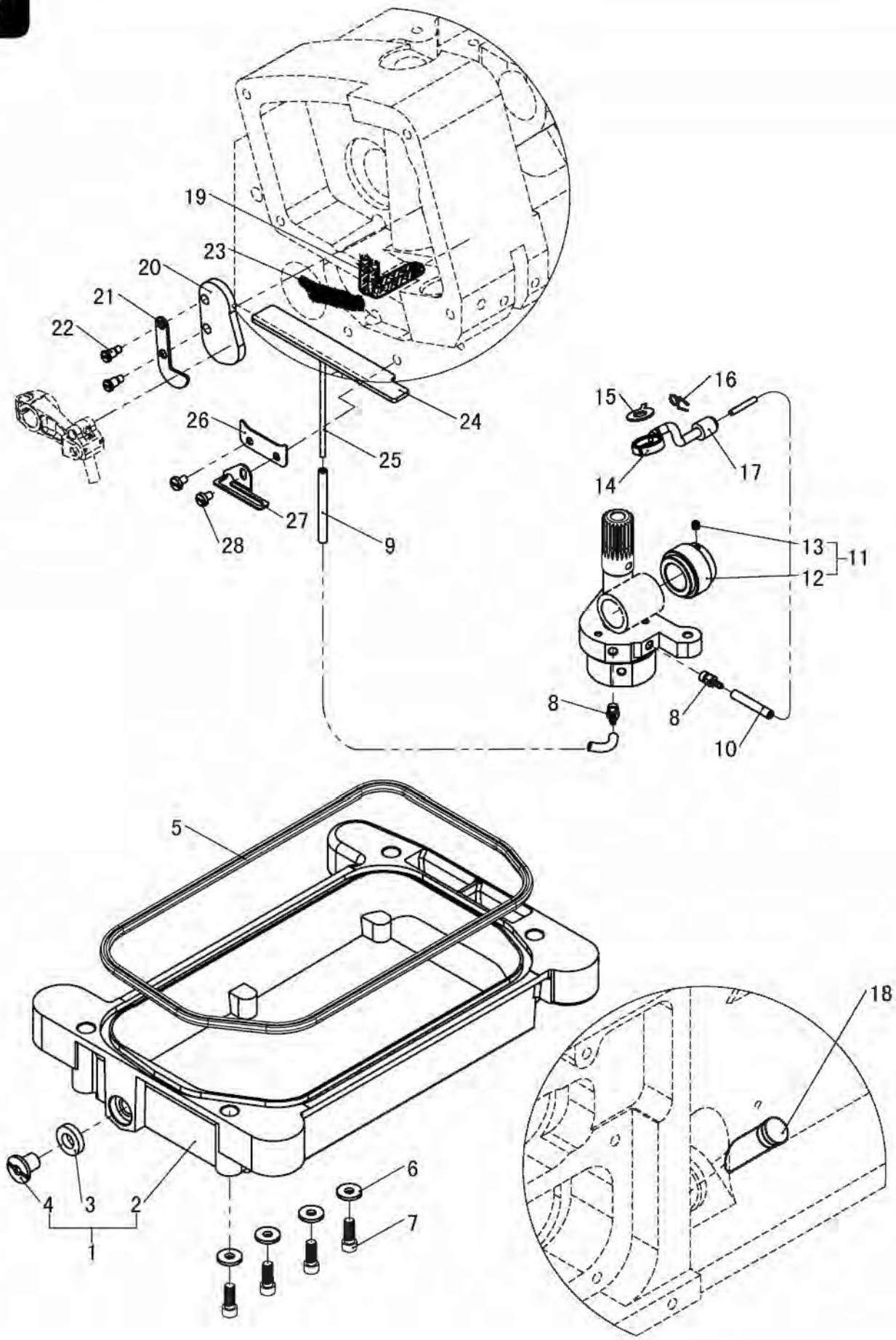

17. 油盘部分 Oil reservoir component

序号	图号	名称		4线	4线厚料	备注
		中文	英文			
1	201.15-01	油盘组件	Oil Tray ASM	1	1	
2	201.15-01-01	油盘	Oil Tray	(1)	(1)	
3	201.15-01-02	放油螺钉油封	Oil Seal	(1)	(1)	
4	201.15-01-03	放油螺钉	Oil Release Screw	(1)	(1)	
5	201.15-04	密封圈	Oil Reservior Gasket	1	1	
6	05-053201450-1	垫片	Gasket	4	4	
7	01-505001224-1	油盘固定螺钉	Setscrew	4	4	
8	201.15-07	油管接头	Oil Pipe Joint	2	2	
9	2101.17-01	机头回油管	Oil Pipe	1	1	
10	2101.17-02	针杆回油管	Oil Pipe	1	1	
11	210.15-10	蜗杆组件	Worm Rod ASM	1	1	
12	210.15-10-01	蜗杆	Worm Rod	(1)	(1)	
13	01-804000421-1	螺钉	Screw	(2)	(2)	
14	2101.17-03	针杆回油器	Oil Returning Components	1	1	
15	2101.17-04	毛毡	Felt	1	1	
16	2101.17-05	油管夹	Oil Pipe Spring	1	1	
17	2101.17-07	橡胶塞	Plug	1	1	
18	201.15-18	圆柱形油窗	Oil Window	1	1	
19	2101.17-08	油线	Oil Wick	1	1	
20	2101.17-09	油毡	Oil Felt	1	1	
21	2101.17-10	固定板	Cover	1	1	
22	01-604000821-1	M4螺钉	Screw	2	2	
23	311.06-03	油毡	Oil Wick	1	1	
24	2101.17-13	毛毡	Felt	1	1	
25	2101.17-14	排油管	Exhaust Oil Distributor	1	1	
26	2101.17-15	后盖	Cover	1	1	
27	2101.17-16	垫片	Spacer	1	1	
28	01-504000621-1	M4×6螺钉	Screw	2	2	

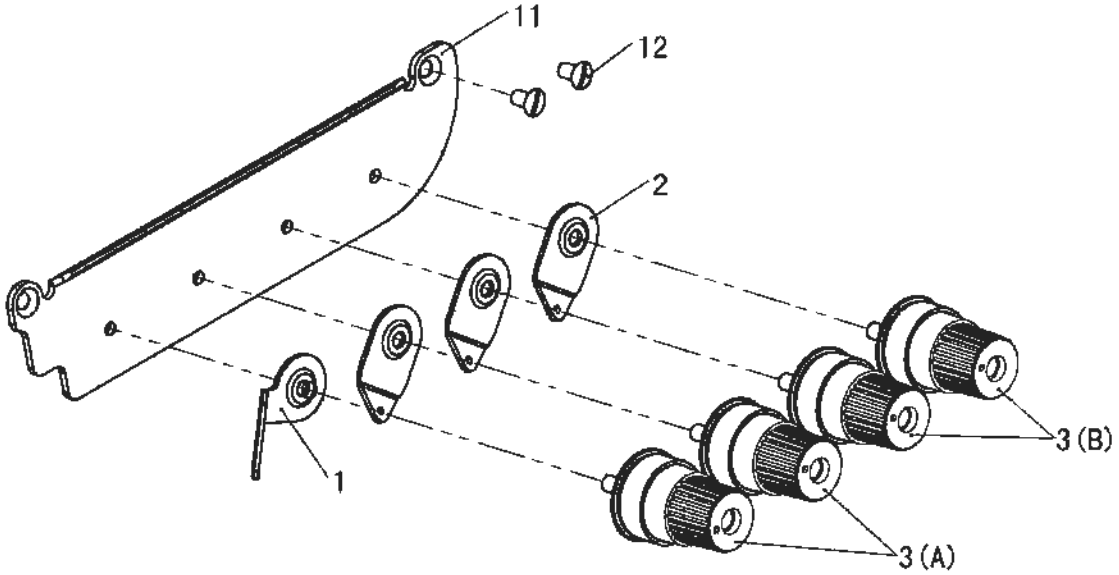
11
12
2
1
3 (B)
3 (A)

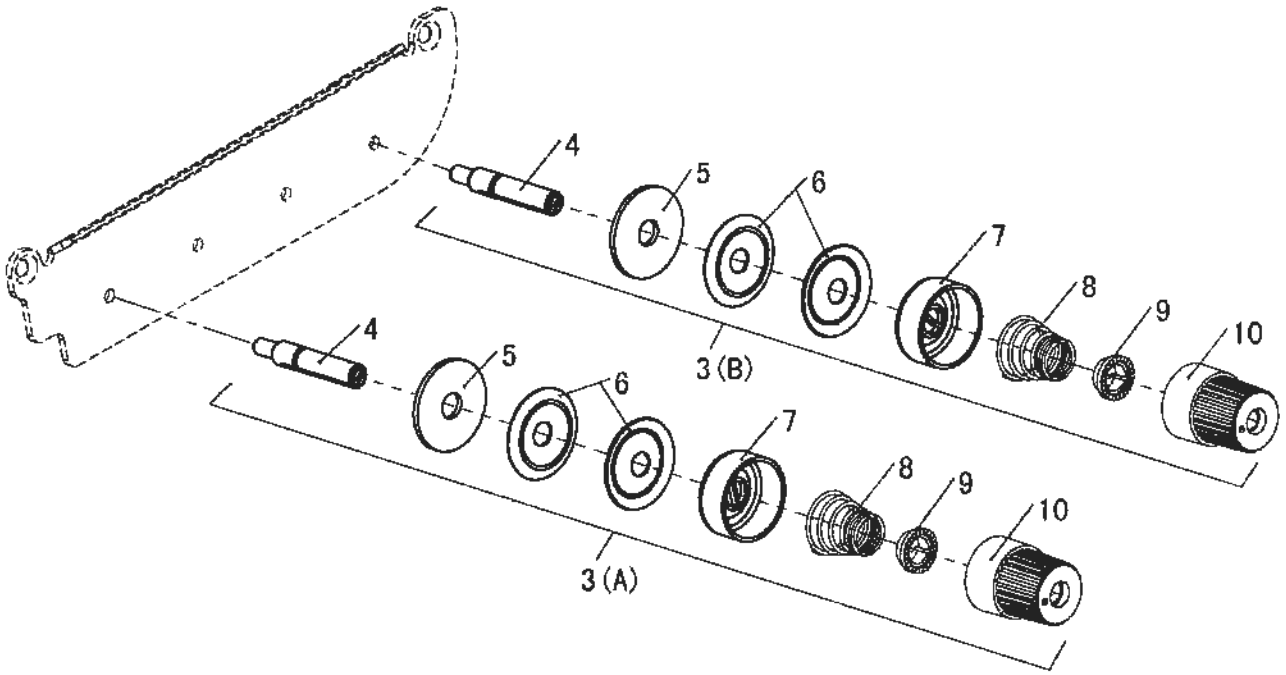
4
5
6
7
8
9
10
3 (B)
4
5
6
7
8
9
10
3 (A)

18.夹线器部分 Thread tension component

序号	图号	名称		4线	4线厚料	备注
		中文	英文			
1	201.16-01G	过线板（C）改型	Thread Tension Disk (C)	1	1	
2	201.16-01	过线板（C）	Thread Tension Disk (C)	3	3	
3	201.16-02 A	夹线器组件A	Thread Tension Components A	2	2	
	201.16-02 B	夹线器组件B	Thread Tension Components B	2	2	
4	201.16-02-01	夹线螺钉	Thread Tension Screw	(4)	(4)	
5	201.16-02-02	羊毛垫	Felt	(4)	(4)	
6	201.16-02-03	夹线片	Thread Tension Disk	(8)	(8)	
7	201.16-02-04	夹线器座	Thread Tension Base	(4)	(4)	
8	201.16-02-05A	夹线簧A	Thread Tension Spring A	(2)	(2)	
	201.16-02-05B	夹线簧B	Thread Tension Spring B	(2)	(2)	
9	201.16-02-06	止动套	Stopping Bushing	(4)	(4)	
10	201.16-02-07	夹线调节螺母	Thread Tension Knob	(4)	(4)	
11	201.16-03G	过线板（B）	Thread Tension Disk (B)	1	1	
12	01-204000821-2	螺钉	Screw	2	2	

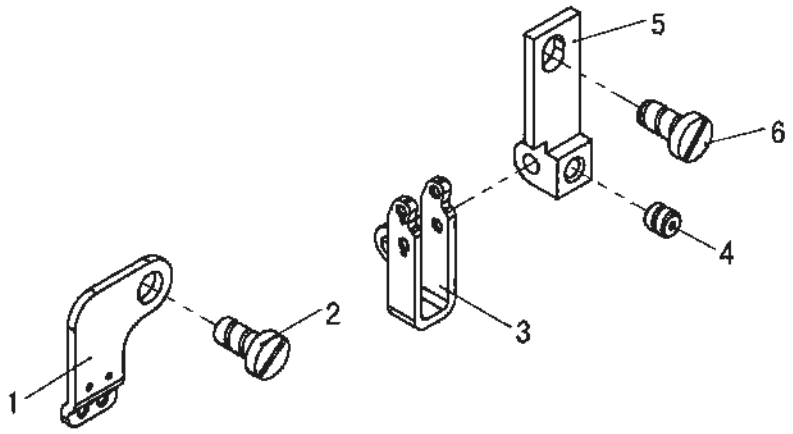
5
6
4
2
3
1

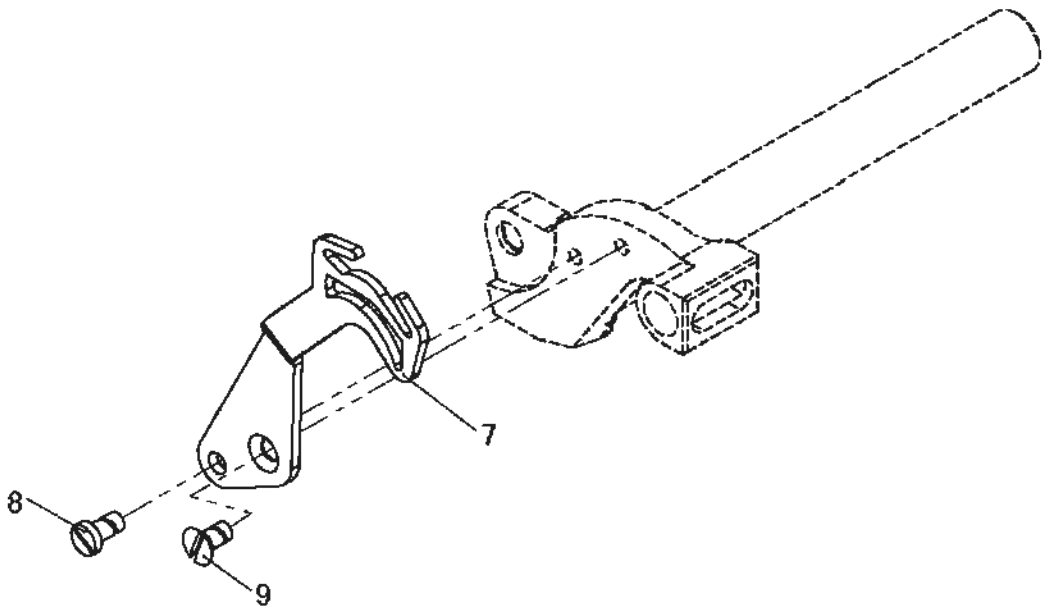
7
8
9

19.过线件部分(1) Thread guider component(1)

序号	图号	名称		4线	4线厚料	备注
		中文	英文			
1	202.17-05	穿线板	Thread Tension Disk	1	1	
2	01-604000821-1	穿线板螺钉	Screw	1	1	
3	202.17-09	二眼过线板组件	Two-hole Thread Tension ASM	1	1	
4	01-804000414-1	二眼过线板螺钉	Screw	1	1	
5	201.17-11	过线板座	Thread Tension Base	1	1	
6	01-604000821-1	过线板座螺钉	Screw	1	1	
7	2101.19-01	挑线板	Thread Take-up Disk	1	1	
8	01-603000621-1	M3×6螺钉	Setscrew	1	1	
9	01-103000621-1	M3×6螺钉	Setscrew	1	1	

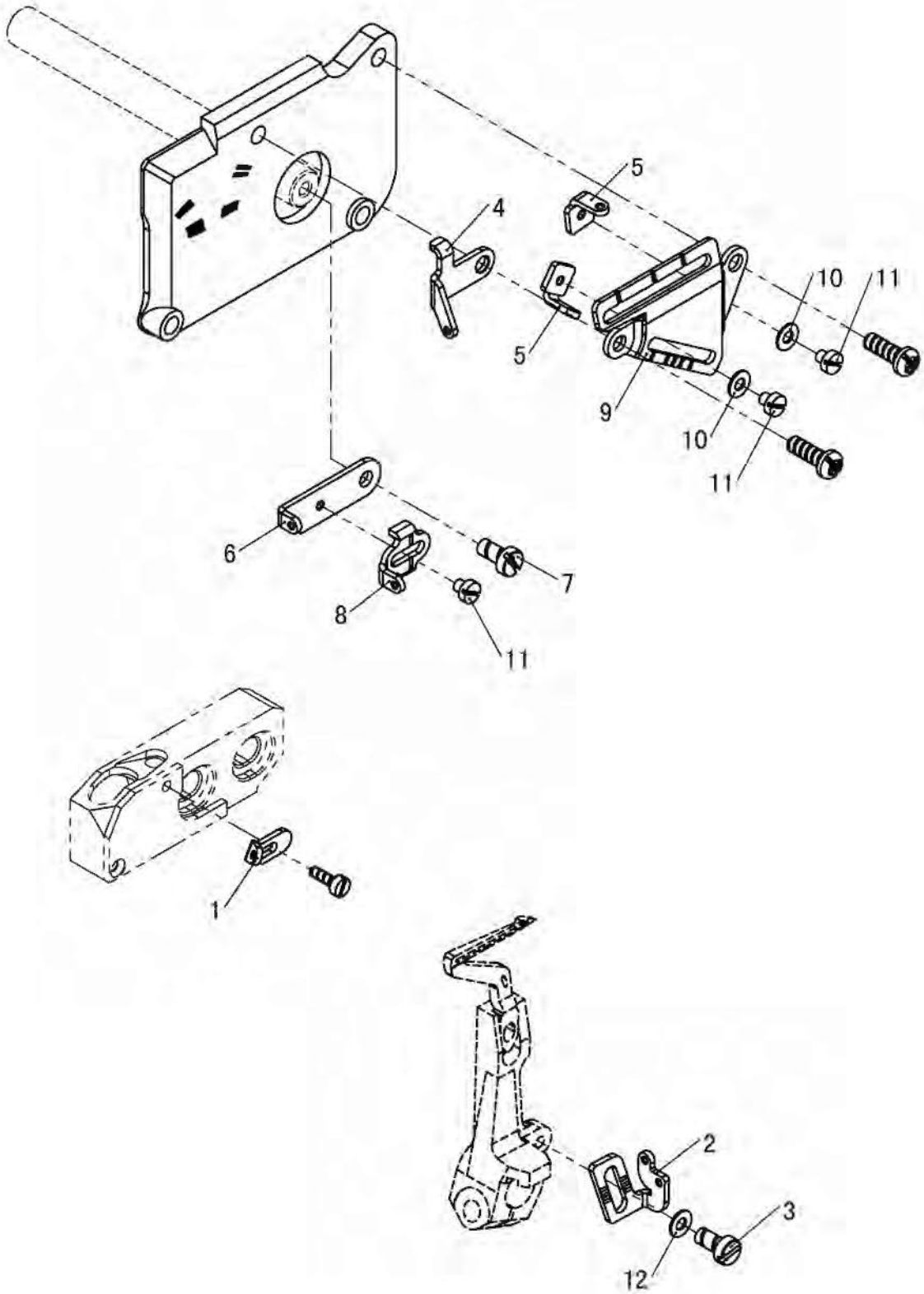
5
4
10
11
5
9
10
11
6
7
8
11
1
2
3
12

20.过线件部分(2) Thread guider component(2)

序号	图号	名称		4线	4线厚料	备注
		中文	英文			
1	201.18-01	过线板	Thread Tension Disk	1	1	
2	2101.20-01	下弯针过线板	Lower Looper Thread Guide Disk A	1	1	
3	01-535000621-1	过线板螺钉	Screw	1	1	
4	201.18-04	上弯针过线板（A）	Upper Looper Thread Guide Disk A	1	1	
5	201.18-05	弯针过线板（B）	Looper Thread Guide Disk B	2	2	
6	201.18-06	上弯针过线板（C）	Upper Looper Thread Guide Disk C	1	1	
7	01-504000821-1	上弯针过线板螺钉	Screw	1	1	
8	201.18-08	下弯针过线板（C）	Lower Looper Thread Guide Disk C	1	1	
9	201.18-09	过线板调整架	Adjusting Bracket	1	1	
10	05-032050700-1	过线板螺钉垫片	Gasket	2	2	
11	01-503000321-1	上弯针过线板螺钉	Screw	3	3	
12	05-036080800-1	平垫片	Gasket	1	1	

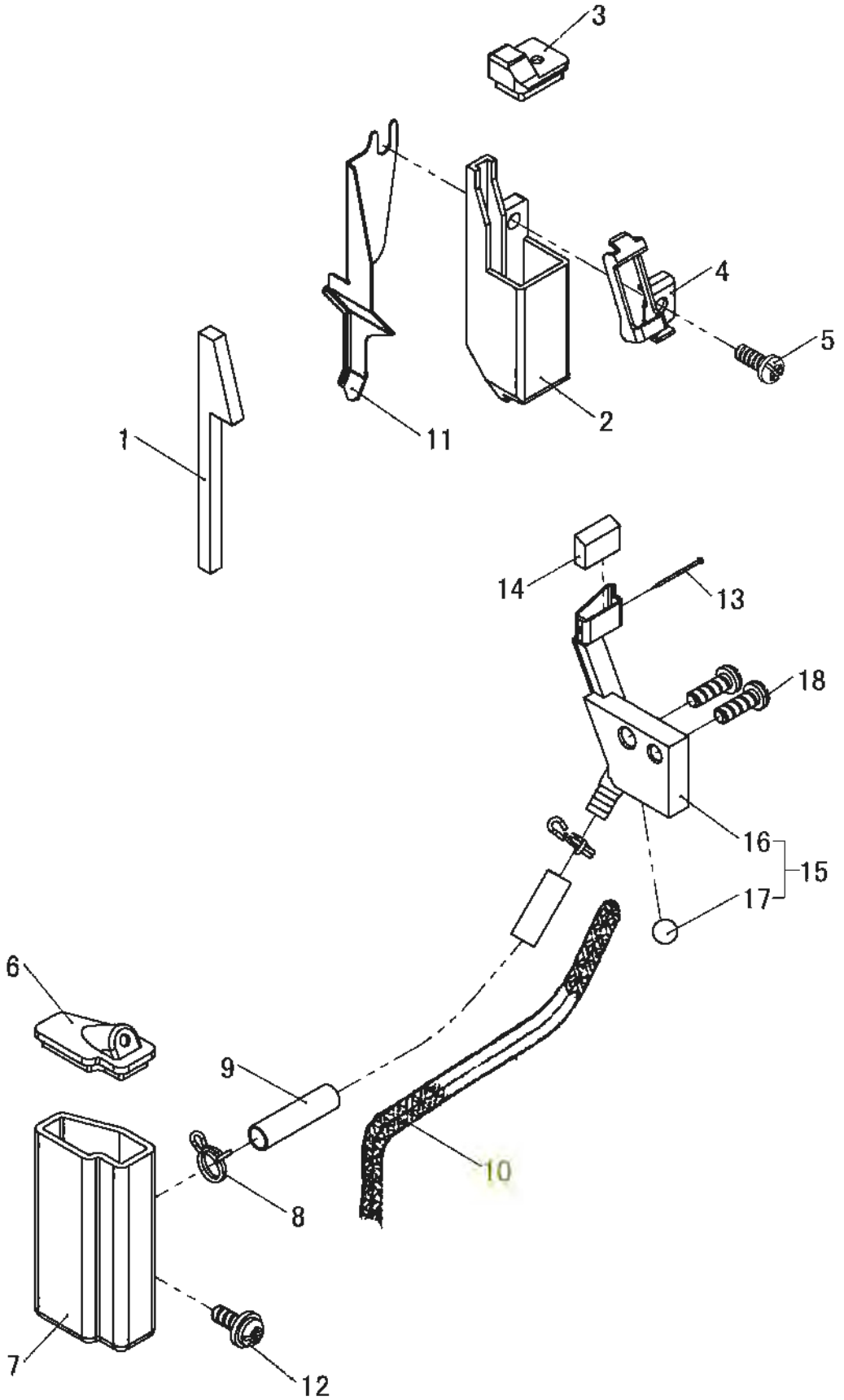
3
4
5
2
11
1
14
13
18
16
15
17
6
9
10
8
7
12

21.硅油装置部分 Silicone oil component

序号	图号	名称		4线	4线厚料	备注
		中文	英文			
1	201.20-01	滤油毡	Filter Felt	1	1	
2	201.20-02	硅油盒	Silicon Oil Box	1	1	
3	201.20-03	油箱盒盖	Box Cover	1	1	
4	201.20-04	压板	Presser Disk	1	1	
5	01-404001023-1	压板螺钉	Screw	1	1	
6	201.20-06	小油箱盖	Tank Cover	1	1	
7	201.20-07	小油箱	Tank Small	1	1	
8	201.20-08A	卡簧	Spring	2	2	
9	201.20-09	油管	Oil Pipe	1	1	
10	201.20-10	油线	Oil Thread	1	1	
11	201.20-11	挡板	Thrust	1	1	
12	18-404001123-4	小油箱固定螺钉	Setscrew (zinc)	1	1	
13	201.20-13	机针冷却器油线钉	Screw	1	1	
14	201.20-14	油毡	Felt	1	1	
15	201.20-15	机针冷却器组件	Needle Fridger Components	1	1	
16	201.20-15-01	机针冷却器	Needle Fridger	(1)	(1)	
17	201.20-15-02	钢球	Steel Ball	(1)	(1)	
18	01-404001223-1	机针冷却器固定螺钉	Setscrew	2	2	

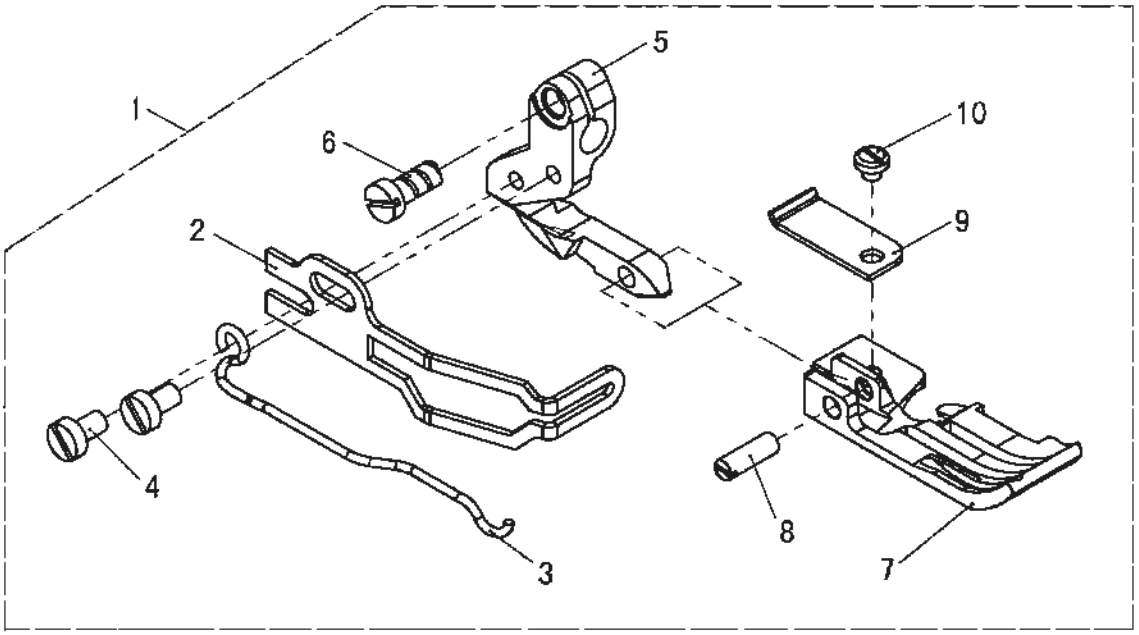
1
2
3
4
5
6
7
8
9
10

22.压脚部分 Pressser foot mechanism

序号	图号	名称		4线	4线厚料	备注
		中文	英文			
1	2101.22-01	压脚组件	Presser Foot components	1		
	2102.22-01	压脚组件	Presser Foot components		1	
2	2101.22-01-01	护指器	Stopper	1	1	
3	2101.22-01-02	压脚弹簧	Presser Foot Spring	1	1	
4	01-503000521-1	压脚弹簧固定螺钉M3x5	Setscrew	2	2	
5	2101.22-01-03	压脚柄	Presser Foot Crank	1	1	
6	01-535000821-1	压脚柄固定螺钉 M3.5x8	Screw	1	1	
7	2101.22-01-04	压脚底板	Presser Foot Plate	1		
	2102.22-01-04	压脚底板	Presser Foot Plate		1	
8	2101.22-01-05	压脚底板连接螺钉	Screw	1	1	
9	2101.22-01-06	挡布板	Retainer	1	1	
10	02-506560321-1	挡布板固定螺钉C1x2.3	Setscrew	1	1	

23

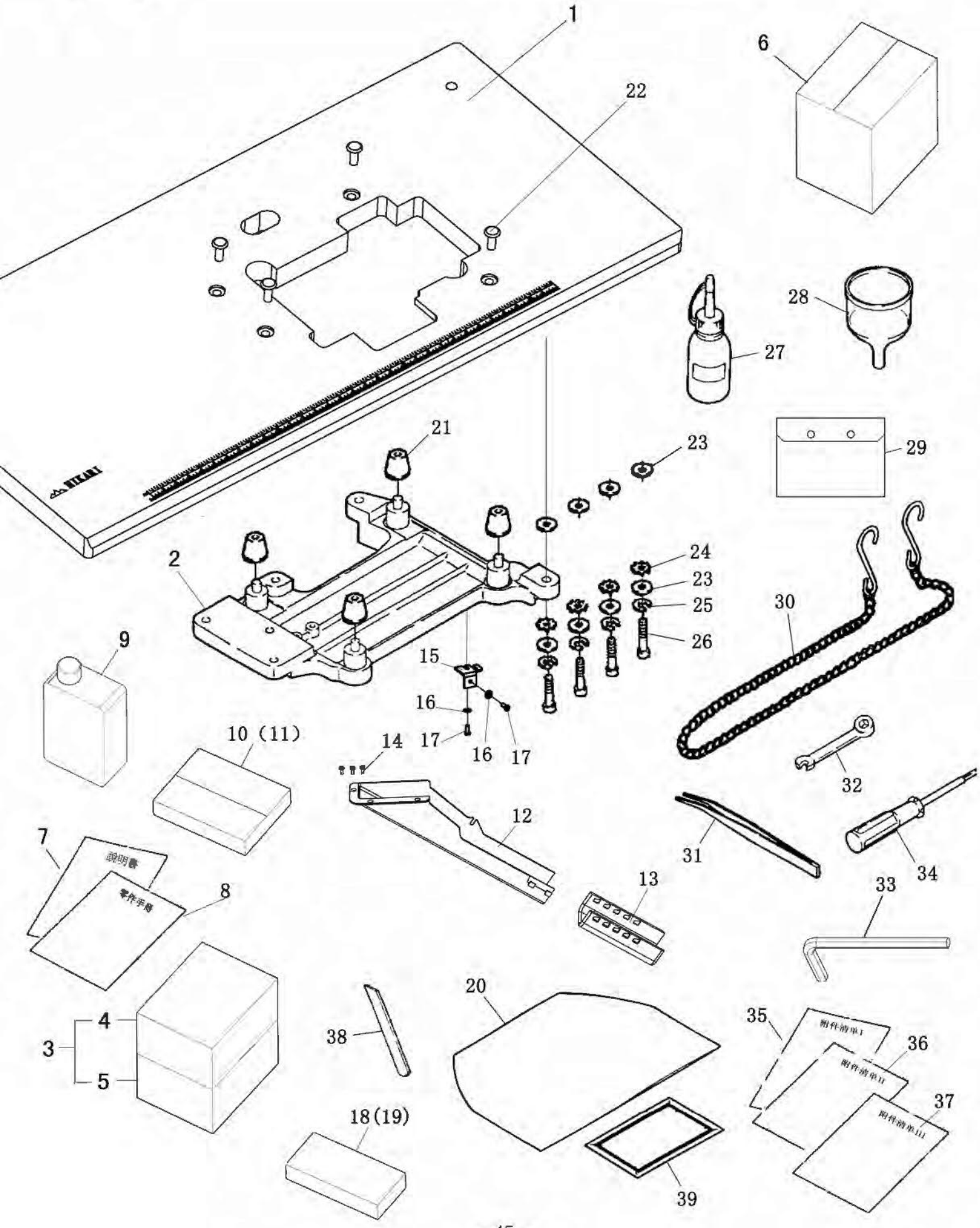
1
22
6
28
27
21
23
29
2
24
23
25
26
30
9
15
16
17
16
17
10 (11)
14
32
12
31
34
7
説明書
零件手冊
8
13
33
4
3
5
38
20
35
附件清单I
36
附件清单II
37
附件清单III
18(19)
39

23.附件部分（1） Accessory list(1)

序号	图号	名称		4线	4线厚料	备注
		中文	英文			
1	2101.23-01	台板	Table(Semi-Sunken)	1	1	
2	201.22-02	台板托盘	Frame Holding Plate	1	1	
3	2101.24-02	泡沫箱组件	Foam Box ASM	1	1	
4	2101.24-02-01	泡沫箱（上）	Foam Box (Up)	(1)	(1)	
5	2101.24-02-02	泡沫箱（下）	Foam Box (Down)	(1)	(1)	
6	2101.24-01	外包装箱	Packing Box (Outside)	1	1	
7	2101.24-03	说明书	Instruction Manual	1	1	
8	2101.24-04	零件手册	Parts Book	1	1	
9	201.22-06	大油壶	Oil Pot	1	1	
10	201.22-07	大附件箱组件	Big Accessories Box ASM	1	1	
11	201.22-07-01	大附件箱(A)	Big Accessories Box (A)	(1)	(1)	
12	201.22-07-02	漏斗槽上段	Cloth Waste Chute Upper	(1)	(1)	
13	201.22-07-03	漏斗槽下段	Cloth Waste Chute Lower	(1)	(1)	
14	201.22-07-04	漏斗槽上段固定螺钉	Setscrew	(3)	(3)	
15	201.22-07-05	漏斗槽固定板	Funnel Chute Fixed Plate	(1)	(1)	
16	201.22-07-06	漏斗槽固定板垫片	Gasket	(2)	(2)	
17	01-404001023-1	漏斗槽固定板螺钉	Screw	2	2	
18	201.22-07-08	小附件箱组件	Small Accessories Box ASM	(1)	(1)	
19	201.22-07-08-01	小附件箱（C）	Small Accessories Box (C)	{1}	{1}	
20	201.22-07-08-02	防尘罩	Dust-Proof Cap	{1}	{1}	
21	201.22-07-08-03	机头防震销垫	Dust-Proof Rubber	{4}	{4}	
22	201.22-07-08-04	台板固定螺套	Holding Plate Bolt	{4}	{4}	
23	201.22-07-08-05	台板托盘垫片	Fram Holding Plate Spacer	{8}	{8}	
24	201.22-07-08-06	外齿锁紧垫圈	Washer	{4}	{4}	
25	201.22-07-08-07	标准型弹簧垫圈	Standard Spring Washer	{4}	{4}	
26	01-508004524-1	台板托盘螺钉	Fram Holding Plate Screw	{4}	{4}	
27	201.22-07-08-09	小油壶	Oil Container	{1}	{1}	
28	201.22-07-08-10	油漏斗	Oil Funnel	{1}	{1}	
29	201.22-07-08-11	附件袋	Accessories Bag	{1}	{1}	
30	201.22-07-08-12	链钩	Chain Hook	{1}	{1}	
31	201.22-07-08-13	镊子	Tweezers	{1}	{1}	
32	201.22-07-08-14	双头扳手S8	Double-ended Spanner S8	{1}	{1}	
33	201.22-07-08-15	内六角扳手S6	Hexagon Spanner S6	{1}	{1}	
34	201.22-07-08-16	有柄内六角扳手S1.5	Hexagon Spanner S1.5	{1}	{1}	
35	2101.23-07-08-17	附件清单I	Accessories Listing I	{1}	{1}	
36	2101.23-07-08-18	附件清单II	Accessories Listing II	{1}	{1}	

23

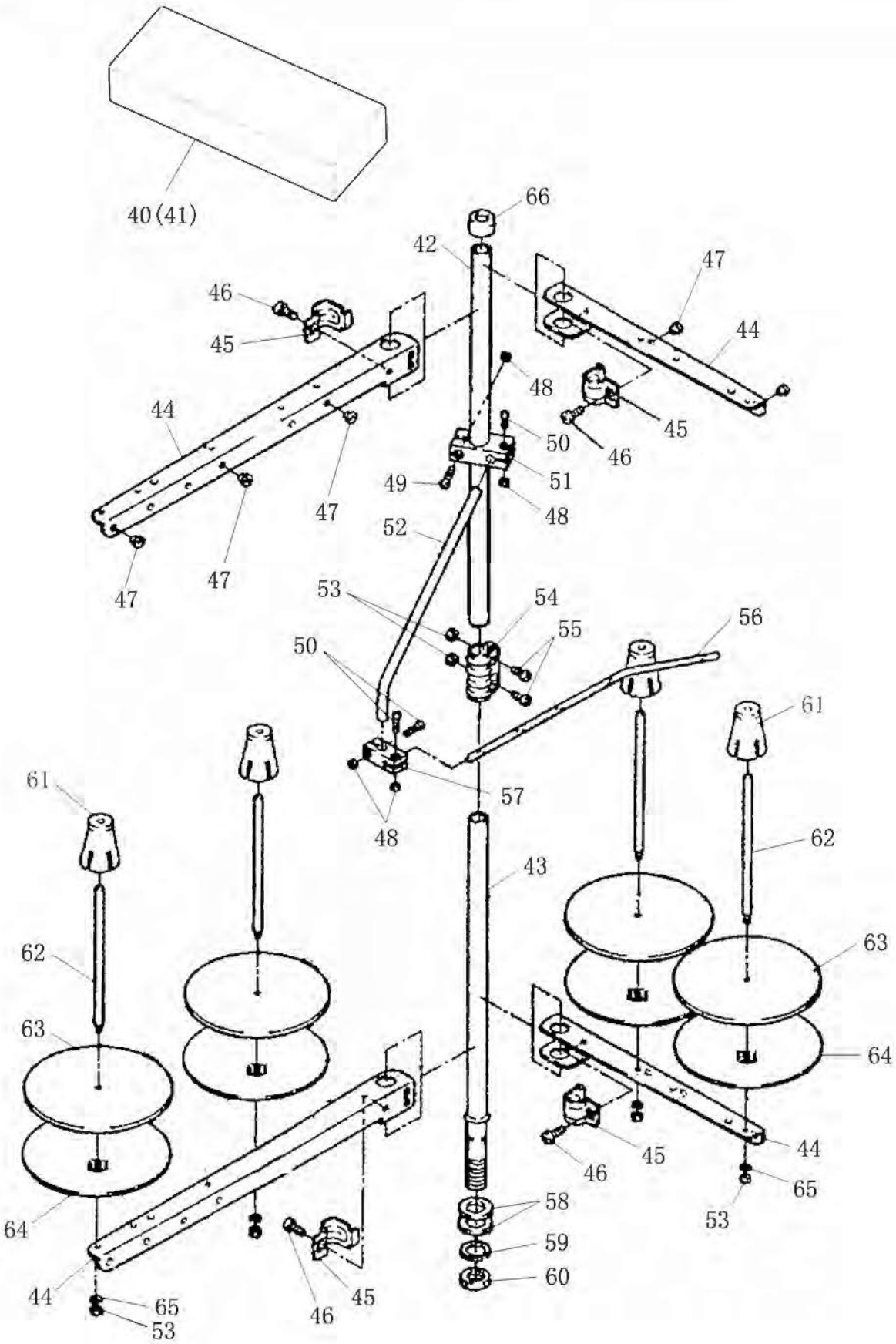
40(41)
66
42
47
46
45
44
48
44
45
50
46
49
51
47
48
52
47
47
53
54
55
56
50
61
57
61
48
62
43
62
63
63
64
64
44
45
46
65
53
58
59
60
44
65
53
46
45

23.附件部分（2） Accessory list(2)

序号	图号	名称		4线	4线厚料	备注
		中文	英文			
37	201.22-07-08-19	附件清单III	Accessories Listing III	{1}	{1}	
38	201.11-21	下切刀	Knife	{1}	{1}	
39	201.05-32G	机针（DC×27#11）	Needle	{2}	{2}	
40	202.22-07-09	中附件箱组件	Center Accessories Box ASM	(1)	(1)	
41	201.22-07-09-01	中附件箱（B）	Center Accessories Box (B)	{1}	{1}	
42	201.22-07-09-02	线架上管	Thread Standing Pipe (upper)	{1}	{1}	
43	201.22-07-09-03	线架下管	Thread Standing Pipe (lower)	{1}	{1}	
44	202.22-07-09-04	过线臂（短）	Thread Guide Arm (short)	{4}	{4}	
45	201.22-07-09-05	张扣	Thread Guide Arm Joint	{4}	{4}	
46	201.22-07-09-06	张扣螺钉	Thread Guide Arm Joint Screw	{4}	{4}	
47	201.22-07-09-07	过线磁眼	Thread Guide Hole	{4}	{4}	
48	201.22-07-09-08	螺母	Nut	{4}	{4}	
49	201.22-07-09-09	大固定夹螺钉A	Setscrew A	{1}	{1}	
50	201.22-07-09-10	固定夹螺钉B	Setscrew B	{3}	{3}	
51	201.22-07-09-11	大固定夹	Thread Standing Guide Base(big)	{1}	{1}	
52	201.22-07-09-12	固定夹连接杆	Thread Standing Guide Arm	{1}	{1}	
53	201.22-07-09-13	螺母	Nut	{6}	{6}	
54	201.22-07-09-14	上下管接头	Thread Standing Rod Joint	{1}	{1}	
55	201.22-07-09-15	接头螺钉	Screw	{2}	{2}	
56	201.22-07-09-16	穿线杆	Thread Standing Thread Guide	{1}	{1}	
57	201.22-07-09-17	小固定夹	Thread Standing Guide Base(small)	{1}	{1}	
58	201.22-07-09-18	下管垫片	Washer	{2}	{2}	
59	201.22-07-09-19	弹簧垫	Spring Washer	{1}	{1}	
60	201.22-07-09-20	大螺母	Big Nut	{1}	{1}	
61	201.22-07-09-21	线圈芯	Spool Retainer	{4}	{4}	
62	201.22-07-09-22	线圈轴	Spool Pin	{4}	{4}	
63	201.22-07-09-23	线盘垫	Spool Rest Cushion	{4}	{4}	
64	201.22-07-09-24	线盘	Spool Rest	{4}	{4}	
65	201.22-07-09-25	弹性垫圈	Spring Washer	{4}	{4}	
66	201.22-07-09-26	上管盖帽	Thread Stand Rod Rubber Cap	{1}	{1}	

24

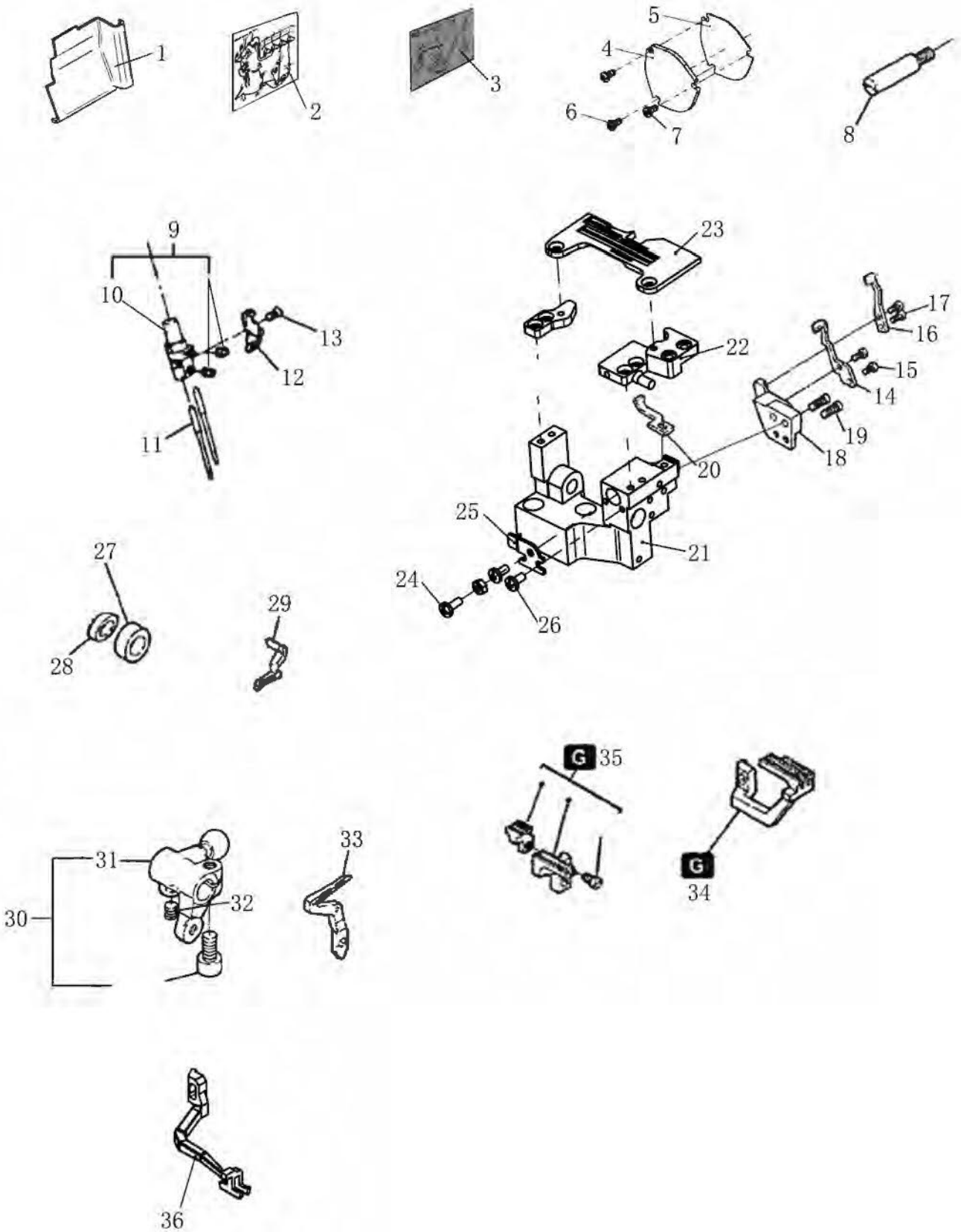
1
2
3
4
5
6
7
8
9
10
11
12
13
14
15
16
17
18
19
20
21
22
23
24
25
26
27
28
29
30
31
32
33
G 35
G
34
36

24.HXT6816T-03（04）KHC2/AK五线下吸专用件（一）

序号	图号	名称		5线	5厚	备注
		中文	英文			
1	203.02-20	前盖板罩板	Cover	1	1	
2	203.02-33A	穿线标识A	Threading Sign	1		
	204.02-33A	穿线标识A	Threading Sign		1	
3	203.02-34	穿线标识B	Threading Sign	1	1	
4	203.04-01G	主轴前轴承盖	Bearing Base ASM	1	1	
5	203.04-01G-01	轴承盖密封垫	Bearing oil seal gasket	1	1	
6	01-104001021-1	轴承座固定螺钉B	Setscrew B	2	2	
7	01-404001023-1	轴承座固定螺钉A	Setscrew A	1	1	
8	203.04-09	凸轮轴	Cam Shaft	1	1	
9	203.05-30	针夹组件	Needle Clamp ASM	1		
10	203.05-30-01	针夹	Needle Clamp	(1)		
9	204.05-30	针夹组件	Needle Clamp ASM		1	
10	204.05-30-01	针夹	Needle Clamp		(1)	
11	203.05-32	机针（DC×27#14）	Needle	2		
	204.05-32	机针（DC×27#21）	Needle		2	
12	203.05-37	机针穿线片	Needle Thread Guide Base	1		
	204.05-37	机针穿线片	Needle Thread Guide Base		1	
13	01-102000521-1	机针穿线片紧固螺钉	Setscrew	1	1	
14	203.06-05	链直针后护针板	Roar Needle Guard	1	1	
15	01-503000621-1	链直针后护针板螺钉	Screw	2	2	
16	203.06-07	主直针前护针板	Front Needle Guard	1	1	
17	01-503000621-1	主直针前护针板螺钉	Screw	2	2	
18	203.06-19	护针板座	Needle Guard Plate Base	1	1	
19	01-904001021-1	护针板座螺钉	Screw	2	2	
20	203.06-10	链针前护针板	Needle Guard	1	1	
21	246.01-10	针板支座	Needle Board Supporting	1	1	
22	246.06-12	针板座	Needle Plate Base	1	1	
23	248.06-17	针板	Needle Plate	1		
	249.06-17	针板	Needle Plate		1	
24	01-404001023-1	调节螺钉	Adjusting Screw	1	1	
25	246.11-26	弹簧挡板	Spring Plate	1	1	
26	01-404000823-1	弹簧挡板固定螺钉	Spring Plate Setscrew	2	2	
27	201.07-13	挡圈	Stopping Gasket	1	1	
28	204.07-37	挡圈	Stopping Gasket		1	
29	201.07-26	上弯针	Upper Looper	1	1	
30	203.08-01	下弯针球曲柄组件	Lower Looper Ball Crank ASM	1	1	
31	203.08-01-01	下弯针球曲柄	Lower Looper Ball Crank	(1)	(1)	
32	01-805000514-1	下弯针球曲柄螺钉(B)	Screw (B)	1	1	
33	201.08-10	下弯针	Lower Looper	1	1	
34	203.10-30	差动牙	Ratio dog	1		
	204.10-30	差动牙	Ratio dog		1	
35	203.10-36	主送布牙组件	Main Feed Dog Components	1		
	203.10-36-01	主送布牙	Main Feed Dog	(1)		
	201.10-36-02	副送布牙	Differential Feed Dog	(1)		
35	204.10-36	主送布牙组件	Main Feed Dog Components		1	
	204.10-36-01	主送布牙	Main Feed Dog		(1)	
	204.10-36-02	副送布牙	Differential Feed Dog		(1)	
36	2103.11-26	上送布牙	Top Feed Bar	1		
	2104.11-26	上送布牙	Top Feed Bar		1	

注：在HXT6814T-03(04)基础上

24

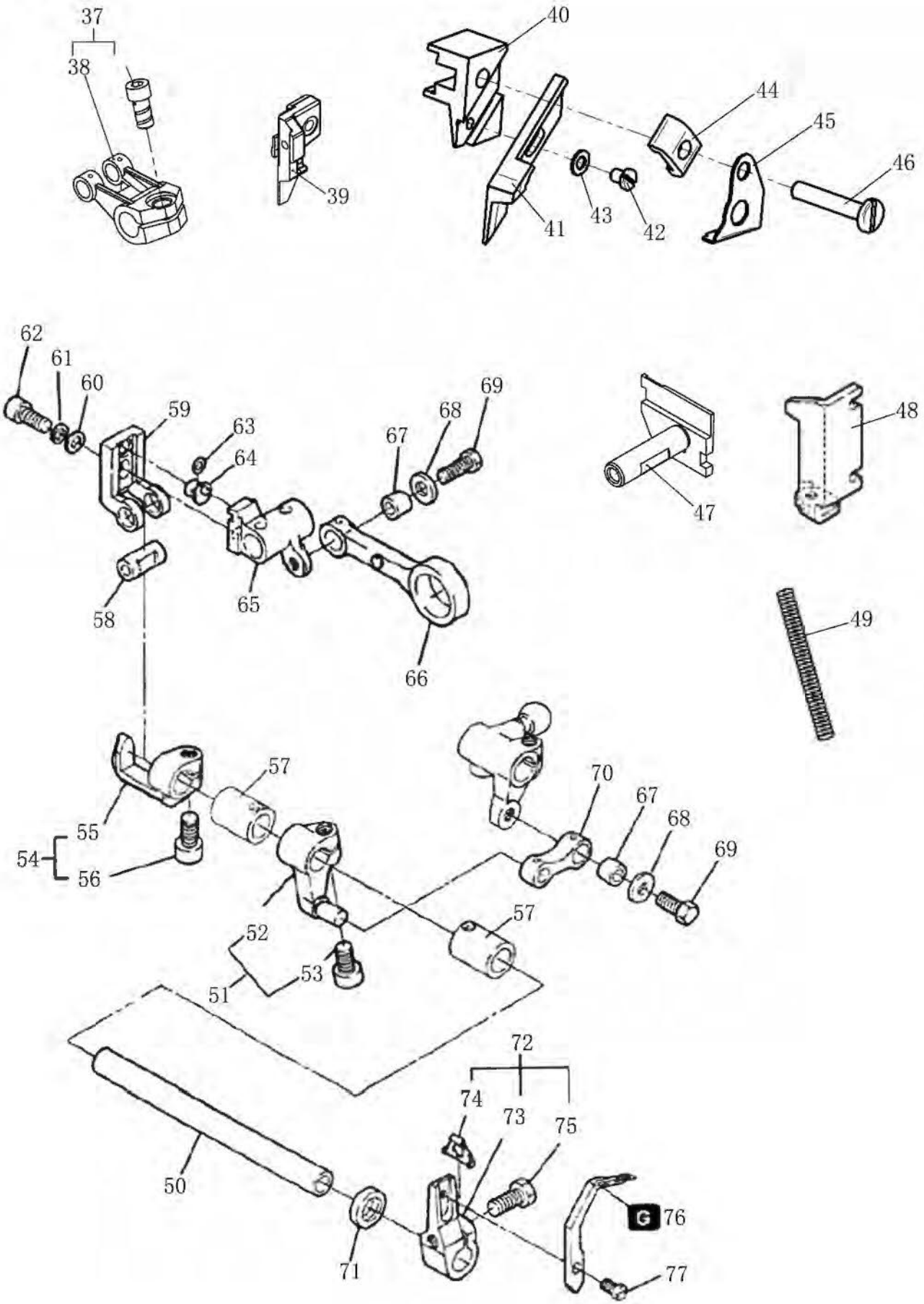
37
38
39
40
41
42
43
44
45
46
47
48
49
50
51
52
53
54
55
56
57
58
59
60
61
62
63
64
65
66
67
68
69
70
71
72
73
74
75
G 76
77

24.HXT6816T-03（04）KHC2/AK五线下吸专用件（二）

序号	图号	名称		5线	5厚	备注
		中文	英文			
37	2103.14-02	上切刀曲柄组件	Feed Forked Arm Components	1	1	
38	2103.14-02-01	上切刀曲柄	Feed Forked Arm	(1)	(1)	
39	203.11-16	上刀座	Plain Knife Support	1		
40	2104.14-03	角刀安装板	Angled Upper Knife Clamp		1	
41	2104.14-04	角切刀	Angled Knife		1	
42	01-503000421-1	螺钉	Screw		1	
43	05-032050600-4	平垫片	Washer		1	
44	2104.14-05	角切刀压板	Angled Upper Knife Gib		1	
45	2104.14-06	切屑压板	Waste Guard		1	
46	01-504002221-1	角切刀架固定螺钉	Screw		1	
47	203.11-19	下切刀架	Lower Knife Slide Stud	1	1	
48	201.13-19	抬压脚杠杆限位板	Lifting Level Link Limited Board	1	1	
49	204.13-29	调压簧	Presser Spring		1	
50	203.12-01	前弯针轴	Front Looper Shaft	1	1	
51	203.12-02	前弯针曲柄组件	Front Looper Crank ASM	1	1	
52	203.12-02-01	前弯针曲柄	Front Looper Crank	(1)	(1)	
53	01-506751224-1	前弯针曲柄固定螺钉	Front Looper Crank Setscrew	(1)	(1)	
54	203.12-04	驱动座组件	Driving Base ASM	1	1	
55	203.12-04-01	驱动座	Driving Base	(1)	(1)	
56	01-506751224-1	驱动座紧定螺钉	Driving Base Setscrew	(1)	(1)	
57	201.07-06	弯针纵轴轴套	Cushion	2	2	
58	203.12-07	驱动曲柄销	Driving Crank Pin	1	1	
59	203.12-08	驱动曲柄	Driving Crank	1	1	
60	05-053101001-5	垫片	Gasket	1	1	
61	07-0521313-1	弹簧垫片	Cushion	1	1	
62	01-505001224-1	螺钉	Screw	1	1	
63	12-038140	O型圈	O-ring	1	1	
64	203.12-13	偏心轴	Eccentric Cam Shaft	1	1	
65	203.12-14	调节曲柄	Adjusting Crank	1	1	
66	203.12-15	前弯针驱动连杆	Main Feed Driving Link	1	1	
67	201.10-16	套筒	Pin Collar	2	2	
68	05-053151102-5	垫片	Washer	2	2	
69	01-705051325-1	螺钉	Screw	2	2	
70	203.12-25	前弯针连杆	Main Feed Link	1	1	
71	13-09340190	油封	Oil Seal	1	1	
72	203.12-21	前弯针架组件	Front Looper Bracket ASM	1	1	
73	203.12-21-01	前弯针架	Front Looper Bracket	(1)	(1)	
74	203.12-21-02	垫片	Washer	(1)	(1)	
75	01-705001325-1	前弯针架固定螺钉	Setscrew	(1)	(1)	
76	203.12-24	前弯针	Front Looper	1		
77	01-535000621-1	前弯针固定螺钉	Front Looper Setscrew	1	1	

注：在HXT6814T-03(04)基础上

24

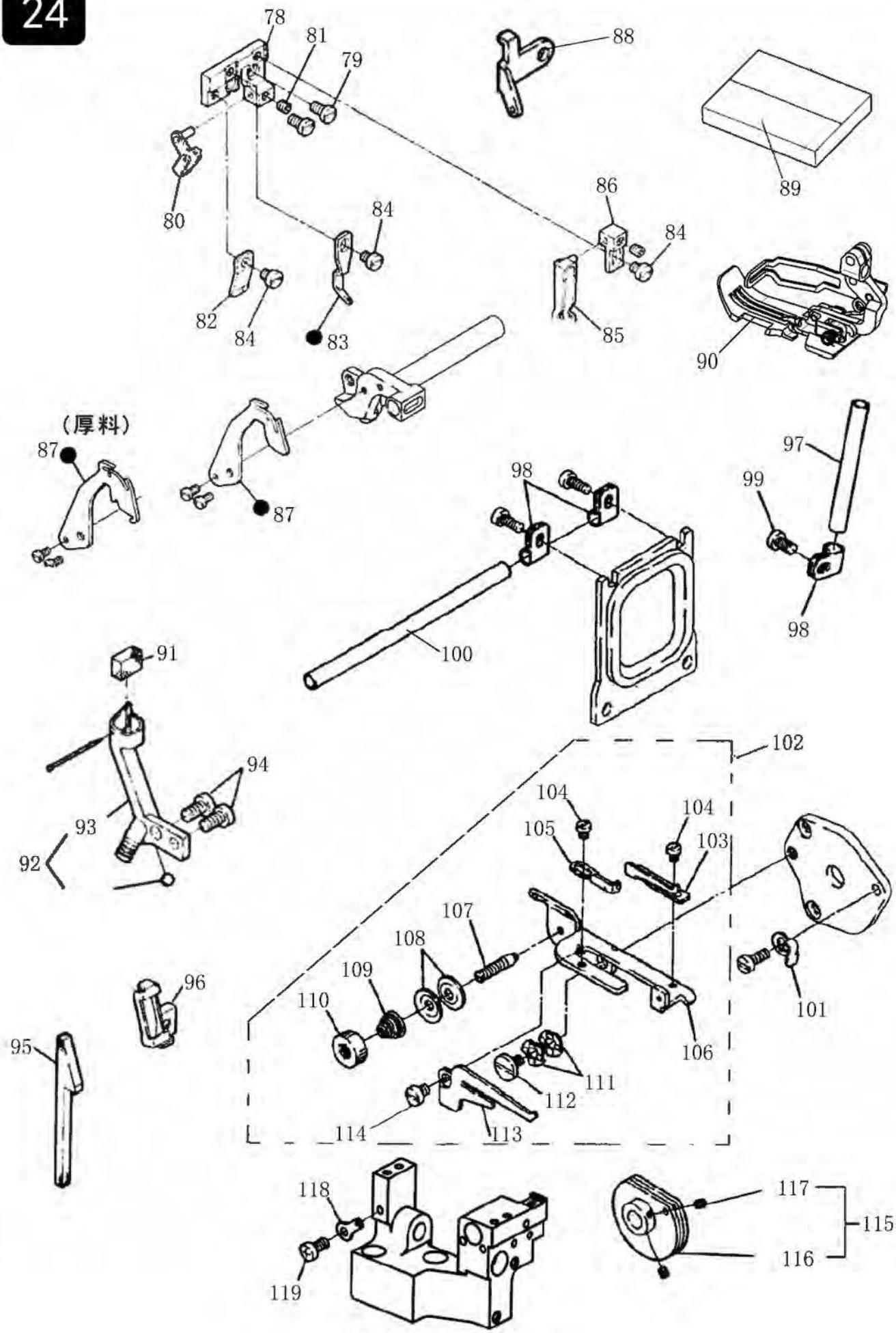
78
81
79
88
89
80
86
84
84
82
84
83
85
90
(厚料)
87
87
97
98
99
98
100
91
94
93
92
102
104
104
105
103
107
108
109
110
96
95
101
106
111
112
114
113
118
119
117
115
116

24.HXT6816T-03（04）KHC2/AK五线下吸专用件（三）

序号	图号	名称		5线	5厚	备注
		中文	英文			
78	203.17-01	过线板固定座	Thread Tension Base	1	1	
79	01-604000821-1	过线板固定座螺钉	Thread Tension Base Screw	2	2	
80	203.17-03	过线板组件	Thread Tension ASM	1	1	
81	01-804000414-1	过线板螺钉	Screw	1	1	
82	203.17-05	穿线板	Thread Tension Disk	1	1	
83	203.17-07	单孔过线板	Single-hole Thread Guide Disk	1		
	204.17-07	单孔过线板	Single-hole Thread Guide Disk		1	
84	01-504000521-1	单孔过线板固定螺钉	Setscrew	3	3	
85	203.17-09	二眼过线板组件	Two-hole Thread Tension ASM	1	1	
86	203.17-11	过线板座	Thread Tension Base	1	1	
87	2103.19-01	挑线板	Thread Take-up Disk	1		
	2104.19-01	挑线板	Thread Take-up Disk		1	
88	204.18-04	上弯针过线板（A）	Upper Looper Thread Guide Disk A		1	
89	2103.23-07	大附件箱组件	Big Accessories Box ASM	1	1	
90	2103.22-01	压脚组件	Presser Foot Components	1		
	2104.22-01	压脚组件	Presser Foot Components		1	
91	203.20-14	油毡	Felt	1	1	
92	203.20-15	机针冷却器组件	Needle Fridger Components	1	1	
93	203.20-15-01	机针冷却器	Needle Fridger	(1)	(1)	
94	01-404000823-1	机针冷却器固定螺钉	Setscrew	2	2	
95	203.20-01	滤油毡	Filter Felt	1	1	
96	203.20-04	压板	Presser Disk	1	1	
97	203.19-01	短过线管	Thread Pipe (short)	1	1	
98	203.19-02	过线管夹	Thread Pipe Clamp	3	3	
99	01-404000823-1	过线管夹固定螺钉	Screw	1	1	
100	203.19-04	长过线管	Thread Pipe (long)	1	1	
101	203.19-05	过线环	Thread Ring	1	1	
102	203.19-06	前弯针导线架组件	Components	1	1	
103	203.19-06-01	过线板 A	Thread Tension Disk A	(1)	(1)	
104	01-503000421-1	过线板螺钉	Screw	(2)	(2)	
105	203.19-06-03	过线板B	Thread Tension Disk B	(1)	(1)	
106	203.19-06-04	导线架	Thread Guide Rack	(1)	(1)	
107	203.19-06-05	压线螺钉	Screw	(1)	(1)	
108	203.19-06-06	压线板	Thread Presser Disk	(2)	(2)	
109	203.19-06-07	压线簧	Thread Presser Spring	(1)	(1)	
110	203.19-06-08	压线螺母	Thread Presser Nut	(1)	(1)	
111	201.03-07	波形弹性垫圈	Elastic Cushion	(2)	(2)	
112	201.03-08	导线架螺钉	Screw	(1)	(1)	
113	203.19-06-11	导线板	Thread Guide Disk	(1)	(1)	
114	01-504000521-1	导线板螺钉	Screw	(1)	(1)	
115	203.19-07	张力变换凸轮组件	Tension Changing Cam ASM	1	1	
116	203.19-07-01	张力变换凸轮	Tension Changing Cam	(1)	(1)	
117	01-803000314-1	凸轮轴套紧定螺钉	Setscrew	(2)	(2)	
118	203.19-08	过线板	Thread Tension Disk	1	1	
119	01-404000623-1	过线板螺钉	Screw	1	1	

注：在HXT6814T-03(04)基础上

24

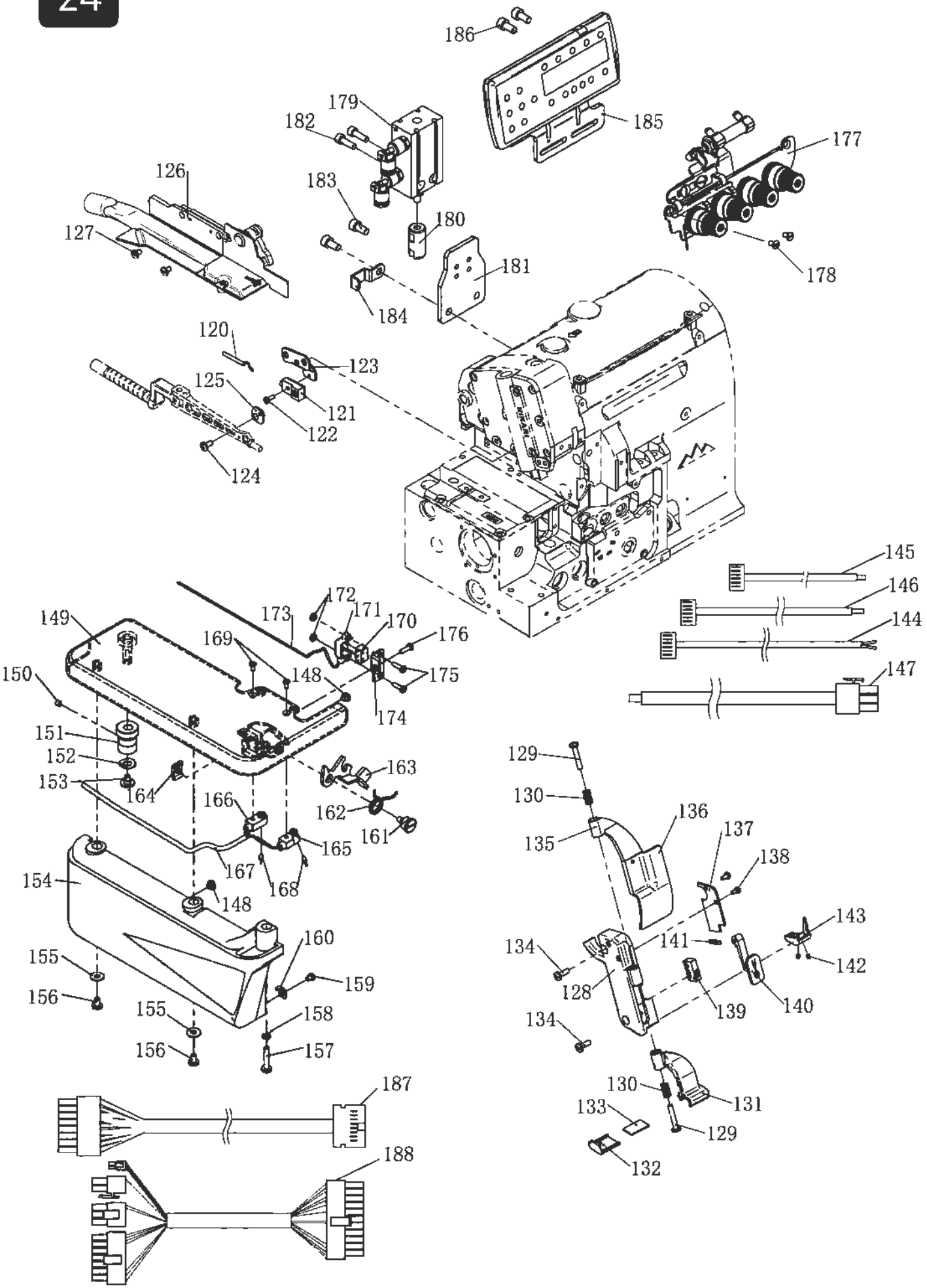
186
179
182
185
177
126
183
180
127
181
178
184
120
123
125
121
122
124
145
146
144
147
172
173
171
170
149
176
169
148
175
150
174
151
152
163
153
164
166
162
161
165
167
168
154
148
160
155
159
156
155
158
156
157
129
130
136
135
137
138
143
134
141
142
128
139
140
134
130
131
133
129
132
187
188

24.HXT6816T-03（04）KHC2/AK五线下吸专用件（四）

序号	图号	名称		5线	5厚	备注
		中文	英文			
120	X-05-34	压脚安全开关连接线	presser seitch Connecting line	1	1	
121	381.06-13-01G	检测器组件	detector ASM	1	1	
122	01-503000821-1	螺钉	Screw	1	1	
123	2101.23-10	压板	Presser Disk	1	1	
124	01-404000823-1	螺钉	Screw	1	1	
125	2101.23-06	磁钢组件	Magnetic steel ASM	1	1	
126	2103.23-10	下吸刀组件	Chain Cutter Complete	1		
	2104.23-10	下吸刀组件	Chain Cutter Complete		1	
127	01-645000621-1	螺钉	Screw	2	2	
128	2101.23-02	感应器前盖	Automatic Sensor Bracket	1	1	
129	01-404002323-3	十字一字槽盘头螺钉	Screw	2	2	
130	246.27-41	护目镜弹簧	Eye Protection Glasses Spring	2	2	
131	2101.23-09	照明灯外罩	Lamp Housing	1	1	
132	246.26-02	照明灯外罩盖	Lamp Housing Cover	1	1	
133	JL-05	节能照明灯组件	LED Lighting	1	1	
134	01-404001423-1	安装螺钉	Screw	2	2	
135	2101.23-08-01	护目镜（上）	Eye Protection Glasses(upper)	1	1	
136	2101.23-08-02	护目镜（下）	Eye Protection Glasses(lower)	1	1	
137	E-056B	电路板	PCB Board ASM	1	1	
138	18-403000823-3	锁电路板螺钉	Screw	2	2	
139	DL01-07-A00	微动开关	Micro Switch	1	1	
140	246.27-02	剪刀按钮	Scissors Button	1	1	
141	246.27-21	剪线按钮压簧	Scissors Button Spring	1	1	
142		发射管	Launch Tube	2	2	
143	2101.23-03	发射感应器外盖	Launch Sensor Housing	1	1	
144	X-05-33	照明灯连接线	Lighting Cable ASM	1	1	
145	DL06-12-A00A	剪刀连线	Cut Line Cable ASM	1	1	
146	X-05-31A	发射感应连接线	Sensor connecting line	1	1	
147	X-05-37	电眼信号发射连接线	Sensor Cable ASM(launch)	1	1	
148	22-04503008	防震塞	Rubber Cushion	2	2	
149	246.03-22	缝台组件	Cloth Base ASM	1	1	
150	01-804000414-1	缝台转动轴固定螺钉	Screw	1	1	
151	201.03-24	缝台转动轴套	Eccentric Bushing	1	1	
152	08-0700311-1	波形弹性垫圈	Cushion	1	1	
153	201.03-08	台螺钉	Screw	1	1	
154	201.03-30G1	缝台下罩壳组件	Cloth Base Lower Cover ASM	1	1	
155	05-043201350-1	下罩壳垫圈	Lower Cover Gasket	2	2	
156	01-404000623-1	下罩壳固定螺钉A	Lower Cover Setscrew	2	2	
157	01-404002023-1	下罩壳固定螺钉B	Setscrew	1	1	
158	07-0421111-1	弹簧垫圈	Cushion	1	1	
159	01-503000421-1	下罩壳压板螺钉	Pressure Board Screw	1	1	
160	201.03-34	下罩壳压板	Lower Sover Pressure Board	1	1	
161	201.03-29	缝台闸固定螺钉	Screw	1	1	
162	201.03-28	缝台闸弹簧	Cloth Base Switch-type Spring	1	1	
163	201.03-27	缝台闸	Cloth Base Switch-type Stopper	1	1	

注：在HXT6814T-03(04)基础上

24

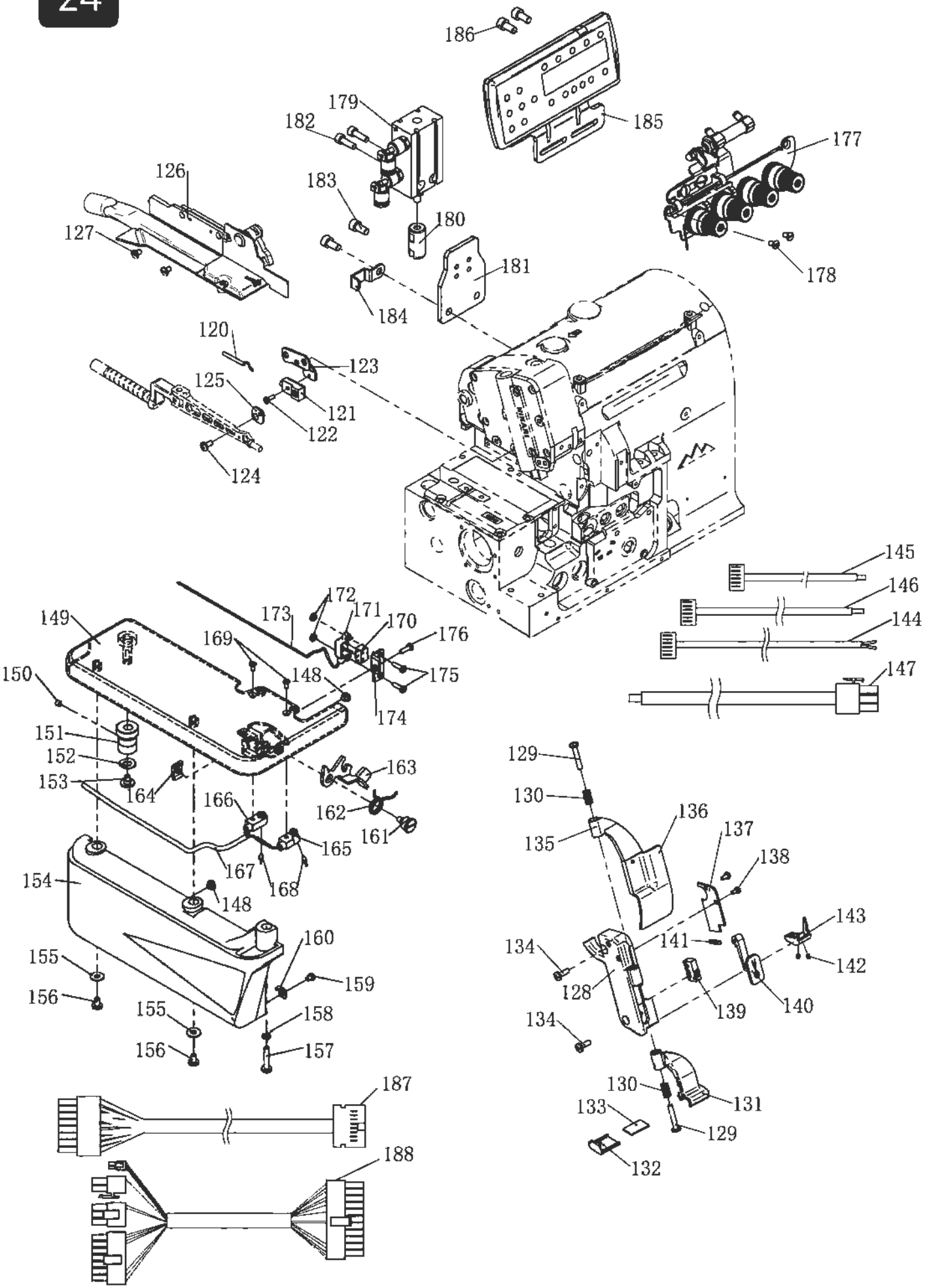
186
179
182
185
177
126
183
180
127
181
178
184
120
123
125
121
122
124
145
146
144
147
172
173
171
170
149
176
169
175
150
148
174
151
152
163
153
164
166
162
161
165
167
168
154
148
160
155
159
156
155
158
156
157
129
130
136
135
137
138
143
134
141
142
128
139
140
134
130
131
133
129
132
187
188

24.HXT6816T-03（04）KHC2/AK五线下吸专用件（五）

序号	图号	名称		5线	5厚	备注
		中文	英文			
164	201.03-26	缝台闸固定板	Fix Board	1	1	
165	246.27-10	前感应器外壳	Before The Sensor Housing	1	1	
166	246.27-42	后感应器外壳	After The Sensor Housing	1	1	
167	L-N14	电眼信号（接收）连接线	Sensor Cable ASM(receiver)	1	1	
168	D-211	接收管	Receiver tube	2	2	
169	01-103000622-3	十字槽沉头螺钉	Screw	2	2	
170	210.27-28	微动开关（弹片式）	Micro Switch (shrapnel-type)	1	1	
171	210.27-07	安全开关外罩	Safety Switch Housing	1	1	
172	03-603000240-3	六角螺母	Nut	2	2	
173	L-N18	安全开关连接线(缝台)	Safety Switch Cable(sewing tabel)	1	1	
174	246.27-43	安全开关支架	Safety Switch Bracket	1	1	
175	01-403001022-3	十字槽盘头螺钉	Screw	2	2	
176	01-404000823-1	十字槽盘头螺钉	Screw	1	1	
177	2103.24-01	松线专用组件	loosing line ASM	1		
	2104.24-01	松线专用组件	loosing line ASM		1	
178	01-204000821-2	一字槽半沉头螺钉	Screw	2	2	
179	210.27-31-00	自由安装型气缸(抬压脚)	Free Mount Cylinder(lift pressure)	1	1	
180	210.27-20	压脚汽缸压头	Pressure Cylinder Head	1	1	
181	210.27-19	压脚汽缸支撑座	Pressure Cylinder Support Block	1	1	
182	01-505002224-1	内六角槽圆柱头螺钉	Screw	2	2	
183	01-506001024-1	内六角槽圆柱头螺钉	Screw	2	2	
184	260.27-50	过线板	Thread Tension Disk	1	1	
185	CP-600B-05/01A	HP006面板	Operation Panel	1	1	
186	18-405001223-3	三组合十字一字盘头螺钉	Screw	2	2	
187	L-N31	操作面板输出连接线	Operator Panel Cable	1	1	
188	HXT10-3A(PP)	接线盒组件	Juction-box ASM	1	1	
188	L-N32	主控制连接线	Main Control Connecting Line	1	1	

注：在HXT6814T-03(04)基础上

25

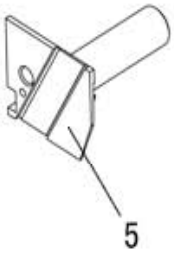

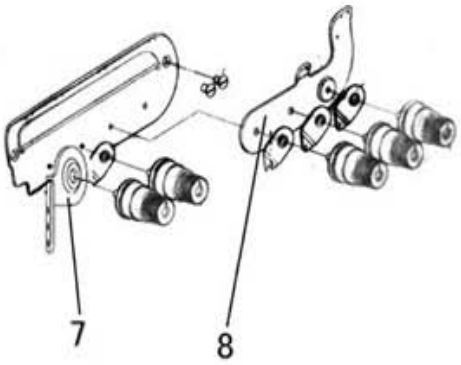

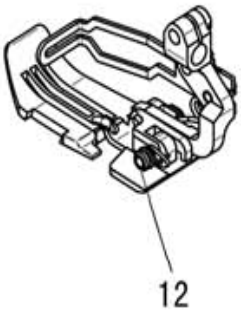

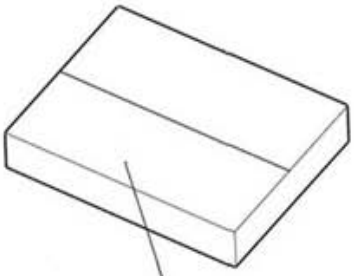

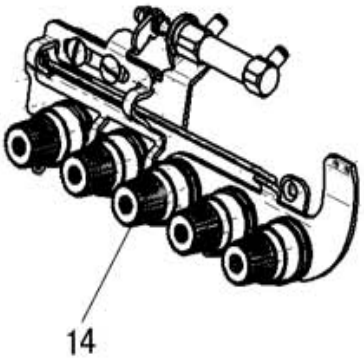

25.HXT6818T-03(04)KHC2/AK 六线下吸专用件

序号	图号	名称		6线	6厚	备注
		中文	英文			
1	206.02-33	穿线标识A	Threading Sign A	1		
	2107.02-33	穿线标识A	Threading Sign A		1	
2	206.05-30	针夹组件	Needle Clamp ASM	1		
	2107.05-30	针夹组件	Needle Clamp ASM		1	
3	256.06-17	针板	Needle Plate	1		
	2107.06-17	针板	Needle Plate		1	
4	2107.14-04	角切刀	Angled Knife		1	
5	2107.11-19	下切刀架	Lower Knife Slide Stud		1	
6	2107.11-21	下切刀	Lower Knife		1	
7	206.16-01G	过线板	Thread Tension Disk	1	1	
8	206.16-04	三针过线板	Thread Tension Disk	1	1	
9	206.17-05	穿线板	Thread Tension Disk	1	1	
10	206.17-09	二眼过线板组件	Two-hole Thread Tension ASM	1	1	
11	2105.19-01	挑线板	Thread Take-up Disk	1		
	2107.19-01	挑线板	Thread Take-up Disk		1	
12	2105.22-01	压脚组件	Presser Foot Components	1		
	2107.22-01	压脚组件	Presser Foot Components		1	
13	2105.22-07	大附件箱组件	Big Accessories Box ASM	1	1	
14	2105.24-01	松线组件	Loosing line ASM	1		
	2107.24-01	松线组件	Loosing line ASM		1	

HXT6818T-03(04)KHC2/AK 三针六线在HXT6816T-03(04)KHC2/AK 五线基础上

HIKARI®

专注高端 电脑包缝机的领导者

FOCUSING ON HIGH-END
COMPUTERIZED OVERLOCK MACHINE LEADER

HP-005 ELECTRONIC CONTROL BOX 电控箱 | 使用说明书 INSTRUCTION MANUAL BOOK

上海富山精密机械科技有限公司

Hikari(shanghai)precise Machinery Science&technology Co.,Ltd

中国上海市金山区朱泾工业园区中达路800号

NO.800,zhongda Road,jinshan Zone,shanghai,china

电话：（00）86-21-67311111

TEL：（00）86-21-67311111

传真：（00）86-21-67311311

Fax：（00）86-21-67311311

E-mail:hikari@chinahikari.com

http:www.chinahikari.com

此说明书仅作参考，如有更改恕不另作通知。

This manual is only for reference.

If there is any modification , we apologize for the changing hence caused.

CE

通过 ISO9001:2008 质量管理体系认证

前　　言

感谢您选用本公司的产品，该手册提供了此系统所需要的操作指导说明。

为了您更好地使用该产品，在使用之前请仔细阅读本手册。

- 由于产品的改进，本手册内容可能随时变更，恕不另行通知。
- 您在使用中若有任何疑问或对我们的产品和服务有任何意见，请随时与我　们售后服务部联系。

PREFACE

Thank you for selecting our product. The introduction provides necessary knowledge and notes for using.

Please read safety introduction carefully and understand them before using.

- The content of the introduction will be amended with the improvement of our product, the notice is not announced.
- If you have any doubts or comments about our product and service, please contact after-sale service.

目　　录

0. 主要技术数据 3
1、 安全注意事项 3
1.1 使用范围 3
1.2 工作环境 3
1.3 安装 3
1.4 保养维修的规定 3
1.5 危险提示 4
1.6 其它安全规定 4
2. 安装与调整 4
2.1 控制箱的安装 4
2.2 停针位的调整 4
2.3 脚踏板后踏力量的调整 5
3. 接线与接地 5
3.1 电源线的接法 5
3.2 控制器接线端子图： 6
3.2.1 通用型接线端子图（平缝、绷缝和包缝等） 5
3.2.2 专用型接线端子图（包缝（含第三光眼功能）） 6
3.2.3 专用型接线端子图（细嘴包缝） 7
4. 主控制箱面板操作说明书 8
4.1 主控制箱面板的布局如下示意图 8
4.2 待机状态 8
4.3 缝纫模式及各段针数设置 9
4.4 前固缝方式及针数设置 10
4.5 后固缝方式及针数设置 10
4.6 工艺参数设置 11
4.7 常用参数说明表 13
5. 故障码/故障原因/故障排除方法表 15
6. 七段数码管显示值与实际数值对照表 16

0. 主要技术数据

供电电压范围：AC220V±15%
供电电源频率：50Hz/60Hz

1、 安全注意事项

1.1 使用范围

本伺服控制器是为工业缝纫机开发设计的，如果在其它方面使用，请注意使用者的安全。

1.2 工作环境

1.2.1 电源电压请遵照控制箱铭牌所标示电压±15%范围内。
1.2.2 请远离高频电磁波发射器等，以免所产生的电磁波干扰本控制器而发生错误动作。
1.2.3 温湿度 ：
a.请在室温 5°C 以上、 45°C 以下的场所操作。
b.禁止在日光直接照射的场所或室外运作。
c.请不要过于接近暖气 (电热器) 旁运作。
d.请保持 30 % ~ 95 % 相对湿度（无凝露）。
1.2.4 请不要在可燃气体或爆炸物附近操作。

1.3 安装

1.3.1 控制器请遵照说明书进行正确安装。
1.3.2 安装前请先关闭电源并拔掉电源线插头，然后进行安装。
1.3.3 装钉电源线时请避免靠近会转动部件，最少要离开 3 公分以上。
1.3.4 为防止噪声干扰或触电事故，请将缝纫机、控制箱接地。
1.3.5 打开电源之前，确定此供应电压必须符合标示在控制箱铭牌上的指定电压±15%范围内。

1.4 保养维修的规定

1.4.1 在操作保养或维修动作前，请先关闭电源。
1.4.2 翻抬机头时，与更换机针或梭子或穿线时，请确认电源已关闭。
1.4.3 控制箱里面有危险高压电，所以关闭电源后要等 5 分钟以上方可打开控制箱盖。
1.4.4 修理及保养的作业，要请经过训练的技术人员执行。
1.4.5 不能在电机及控制箱运转的狀态下进行保养或维修。
1.4.6 所有维修用的零件，须由本公司提供或认可，方可使用。

1.5 危险提示

这个标示符号表示机器在安装时，安全上需要特别加以注意的事项，忽视此标记而进行错误操作可能会导致人员或是机器损伤。

1.6 其它安全规定

1.6.1、在第一次接通电源后，请先以低速操作缝纫机并检查转动方向是否正确。
1.6.2、缝纫机运转时，请不要去触摸上轮、机针等会动作的部位。
1.6.3、所有可动作的部份，必须以所提供的防护装置加以隔离，防止身体接触并请勿在装置内塞入其它物品。
1.6.4、请不要在拆下电机护罩及其它安全装置的情形下操作。
1.6.5、不要使电机或控制箱掉在地上。
1.6.6、不要让茶水等液态物体流入控制箱或电机内部。

2. 安装与调整

2.1 控制箱的安装

1).将控制箱及脚踏控速器安装于台板下方　2). 将踏板与控速器安装连结　3).安装后示意图

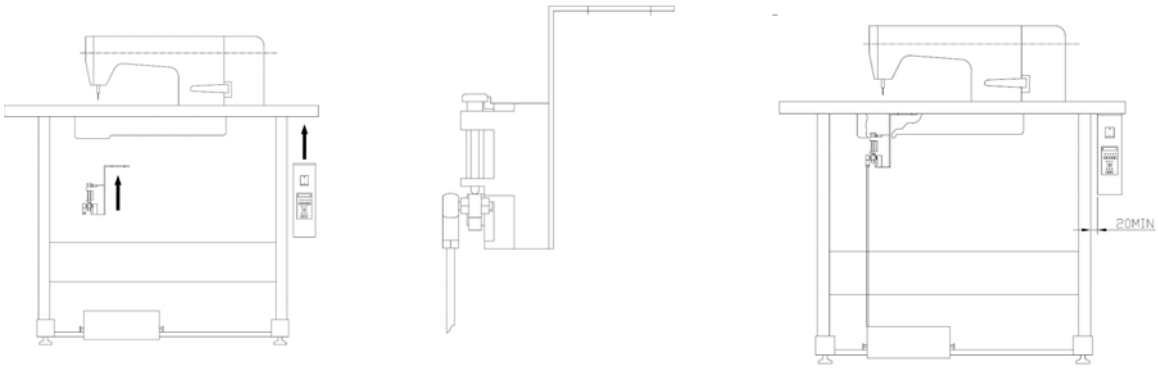

2.2 停针位的调整

2.2.1、 松开手轮上的磁钢固定螺丝，调整位置后重新固定；
2.2.2、 如果实际上停针位超过了预期上针位，将信号磁钢固定盘顺手轮旋转方向调节，反之，逆手轮旋转方向调节。

2.3 脚踏板后踏力量的调整

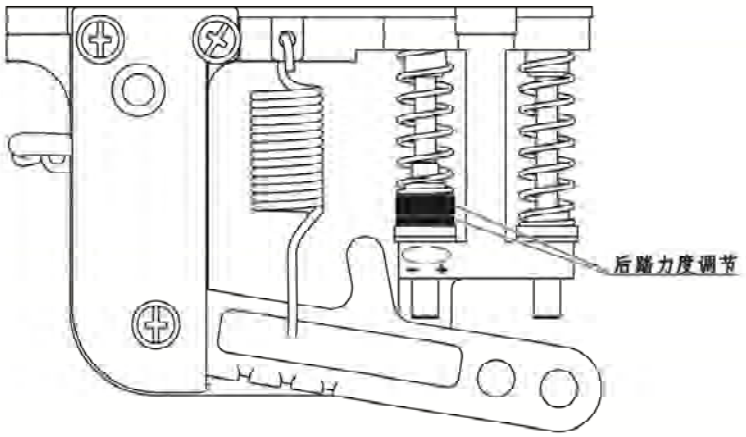

调整需求	调 整 结 果
踏板后踏力量的调整	当螺栓愈向上时，则后踏力量愈重。当螺栓愈向下时，则后踏力量愈轻。

3. 接线与接地

3.1 电源线的接法

本控制器适用于AC220V单相电源，电压输入范围为铭牌标示电压±15%。

> 注意：
> 黄/绿色电源线为接地线，为了人员安全及设备可靠工作，一定要做好系统的接地工程。

3.2　控制器接线端子图：

3.2.1 通用型接线端子图（平缝、绷缝和包缝等）

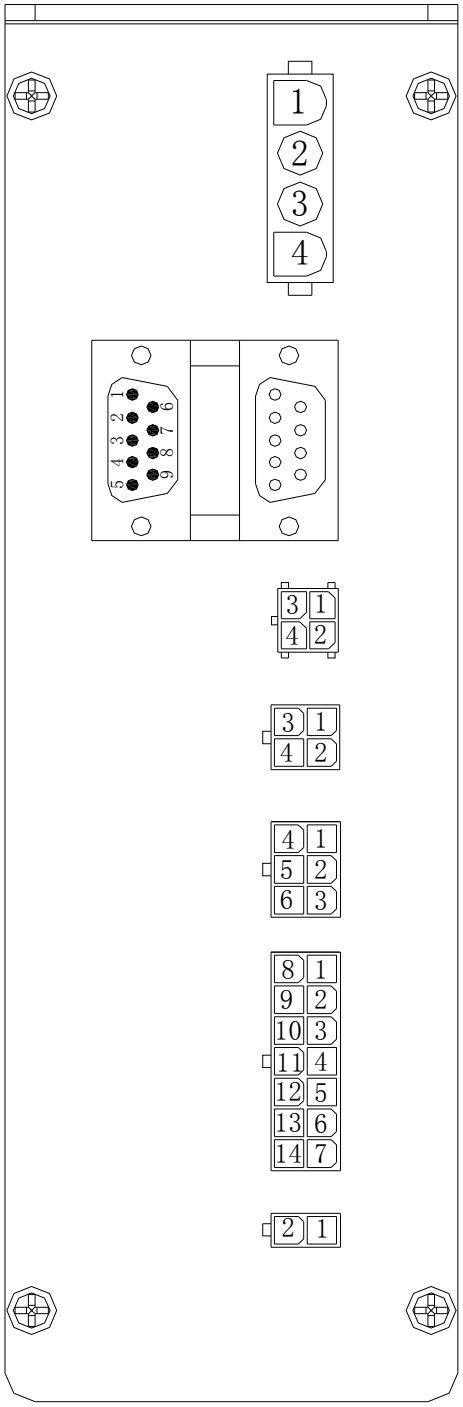

1、大地
2、U相输出
3、V相输出
4、W相输出

1、+5V
2、速度信号
3、立式脚踏剪线控制
4、立式脚踏识别
5、GND
6、GND
7、GND
8、立式脚踏抬压脚控制
9、+5V

1、TXD
2、+12V
3、RXD
4、GND

2、安全开关
4、+5v

1、针位输出
2、GND
3、GND
4、布边传感器信号
5、GND
6、布边传感器电源

1、+30v	8、剪线输出
2、+30v	9、挑线输出
3、大地	10、+30V
4、+30v	11、NC
5、GND	12、手动到缝开关
6、+30V PWM	13、到缝输出
7、GND	14、+5V照明

1、+30V PWM　2、抬压脚输出

3.2.2 专用型接线端子图（包缝（含第三光眼功能））

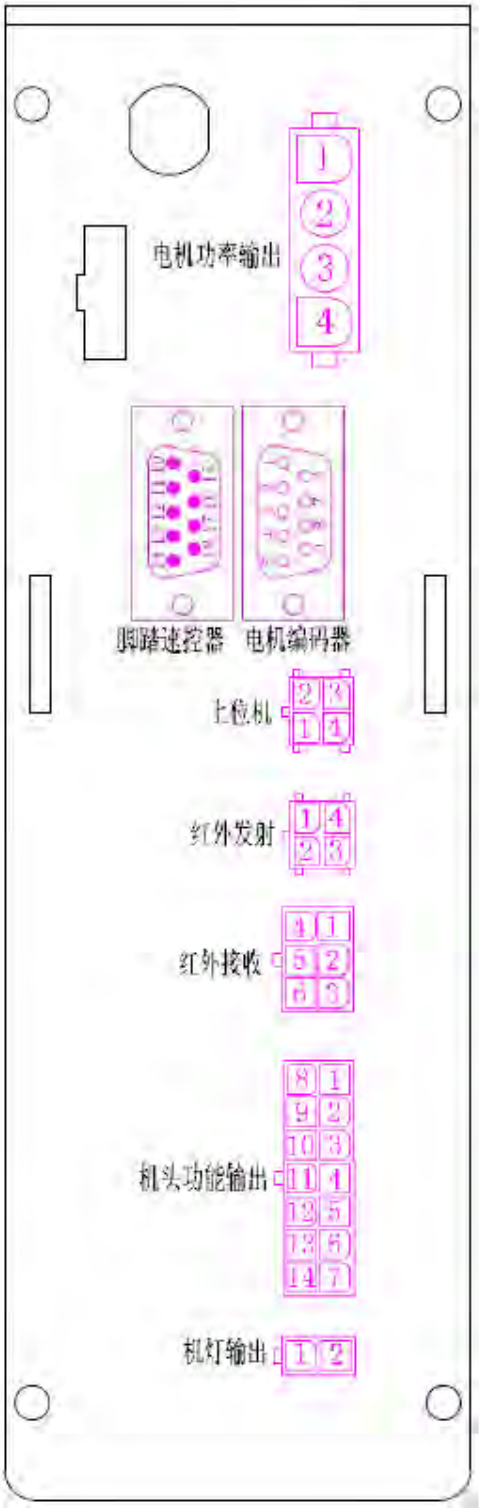

1	接地线			电机功率输出			
2	电机U相						
3	电机V相						
4	电机W相						
脚踏控速器				电机编码器			
10	+5V	15	GND	1	+5V	6	UH
11	定速信号	16	GND	2	上针位	7	VH
12	立式脚踏剪线控制	17	立式脚踏抬压脚控制	3	下针位	8	WH
13	立式脚踏识别	18	+5V	4	码盘B	9	GND
14	GND			5	码盘A		
2	RXD	3	TXD	上位机			
1	GND	4	+12V				
1	红外发射前	4	+5V	红外发射			
2	红外发射中	3	红外发射后				
4	红外接收前	1	+5V	红外接收			
5	红外接收中	2	+5V				
6	红外接收后	3	+5V				
8	剪线电磁铁	1	+30V	机头输出功能			
9	压脚电磁铁	2	+30V				
10	吸风电磁铁	3	预留				
11	拉轮电磁铁	4	预留				
12	压脚安全开关	5	GND				
13	手动开关	6	GND				
14	缝台安全开关	7	+5V				
1	+12V	2	照明输出	机灯输出			

3.2.3 专用型接线端子图（细嘴）

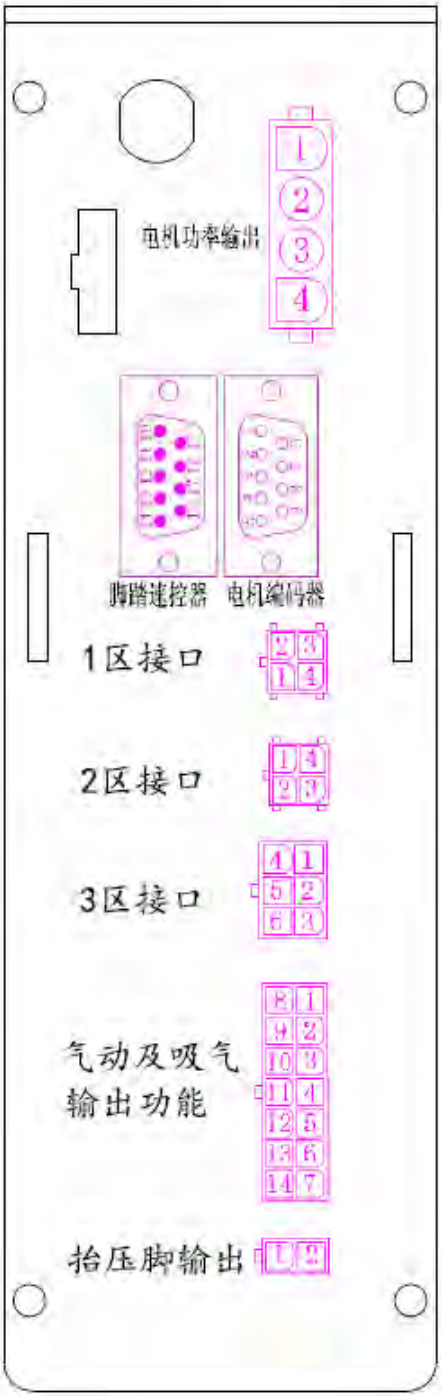

1	接地线			电机功率输出			
2	电机U相						
3	电机V相						
4	电机W相						
脚踏控速器				电机编码器			
10	+5V	15	GND	1	+5V	6	UH
11	定速信号	16	GND	2	上针位	7	VH
12	立式脚踏剪线控制	17	立式脚踏抬压脚控制	3	下针位	8	WH
13	立式脚踏识别	18	+5V	4	码盘B	9	GND
14	GND			5	码盘A		
2	无	3	无	1区接口			
1	无	4	无				
1	无	4	无	2区接口			
2	无	3	无				
4	无	1	无	3区接口			
5	无	2	无				
6	无	3	无				
8	无	1	无	气动及吸气输出功能			
9	膝控开关	2	+30V				
10	无	3	无				
11	无	4	无				
12	气动支撑架输出	5	GND				
13	吸气输出	6	+30V				
14	无	7	无				
1	+30V	2	抬压脚输出	抬压脚输出			

各部的连接插头于插入控制箱的插座时，要注意其形状和方向性，并确实插好。

4. 主控制箱操作说明

4.1 主控制箱面板的布局如下示意图

主控制箱（简称下位机）面板的布局如下示意图，共包含 T1~T6 六个数码管、十一个 LED 以及十个按键。面板有待机、缝纫模式设置、前固缝方式设置、后固缝方式设置、工艺参数设置共五种状态。

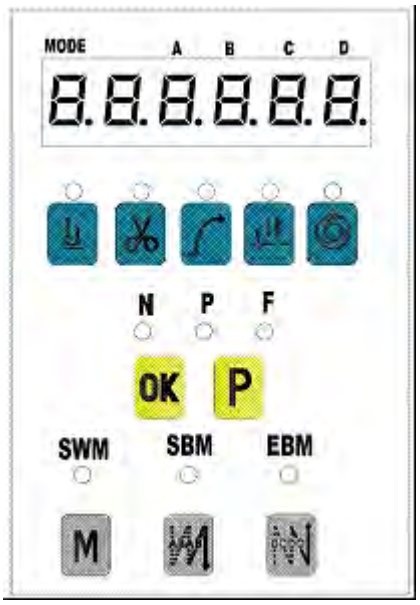

4.2 待机状态

1.上电后,面板显示待机状态，N、P、F、SWM、SBM、EBM 全熄;各功能键上方的 LED 灯按当前参数值显示;

数码管 T1 T2 显示当前缝纫模式代码(00：自由缝；01：定长缝；02：四段缝；03：七段缝；04：八段缝；05：W 缝)，其余各数码管显示“-”。以当前缝纫模式是自由缝为例，显示如下：

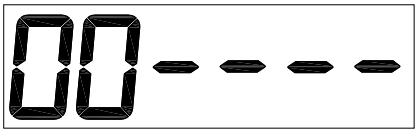

2.选择 键，对应的抬压脚、剪线、慢启动、停针位、自动触发等功能将被设置或取消，同时对应的 LED 点亮或熄灭；

4.3 缝纫模式及各段针数设置

待机状态下按M键，进入缝纫模式设置状态:SWM 亮，其余 LED 全熄;

数码管 T1 T2 显示当前缝纫模式代码（00：自由缝；01：定长缝；02、四段缝；03：七段缝；04：八段缝；05：W 缝），若为定长缝或多段缝，数码管 T3 显示当前段代号“E、F、G、H”，数码管 T5、T6 显示当前段针数;

以四段缝为例，显示如下：

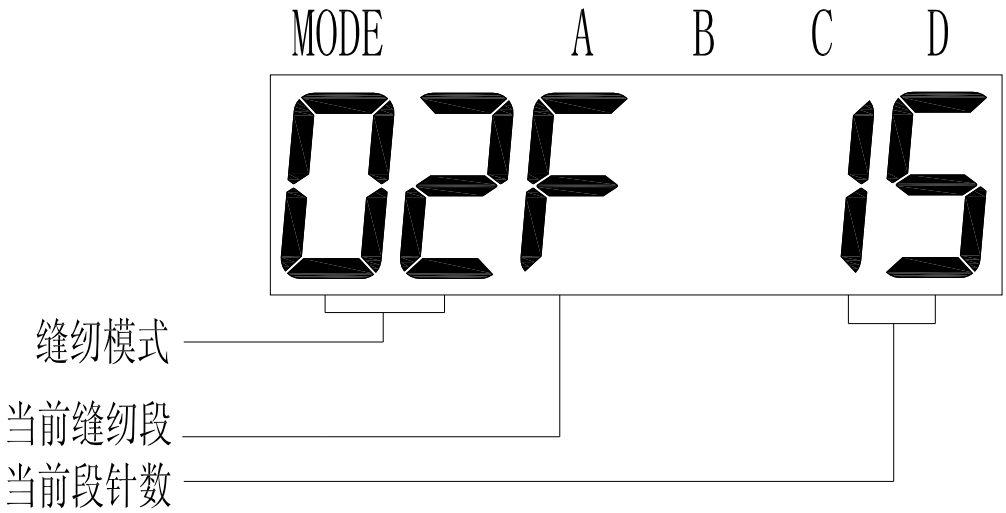

若为自由缝，不显示当前缝纫段;

缝纫模式及段号针数选择:

1. 按下M键，数码管 T1T2 可在 00~05 之间循环显示当前缝纫模式;

2. 按下键，数码管 T3 可在 “E、F、G、H”之间循环显示当前段号;

3. 按下或键，对应的针数加 10 或加 1，0－99 之间循环；. 、键无效;

按下OK键，返回待机模式。

4.4 前固缝方式及针数设置

1. 在待机状态下、缝纫模式设定状态下或后固缝设定状态下:按键，均可进入前固缝方式设置状态，此时 SBM 灯亮，其余 LED 熄灭，T1 显示当前的前固缝方式;

2. 按下键，数码管 T1 循环显示前固缝方式:0（无前固缝）、1（单前固缝）、2（双前固缝）、3（四前固缝），T3、T4 分别显示当前的固缝针数，以前双固缝为例，显示如下：

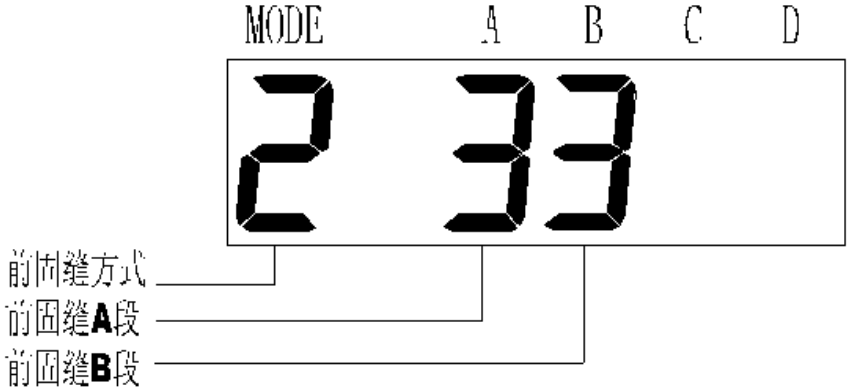

按，其上方对应的针数加一，在 0~F 之间循环切换，按 OK 键返回待机状态。

4.5 后固缝方式及针数设置

1. 在待机状态下、缝纫模式设定状态或后固缝设定状态下，按键，均可以进入后固缝方式设置状态，此时 EBM 亮，其余 LED 熄灭，T2 显示当前的后固缝方式;

2 .按下键,数码管 T2 循环显示后固缝方式:0（无后固缝）、1（单后固缝）、2（双后固缝）、3（四后固缝），

3. T5、T6 分别显示当前的固缝针数，以后双固缝为例，显示如下：。

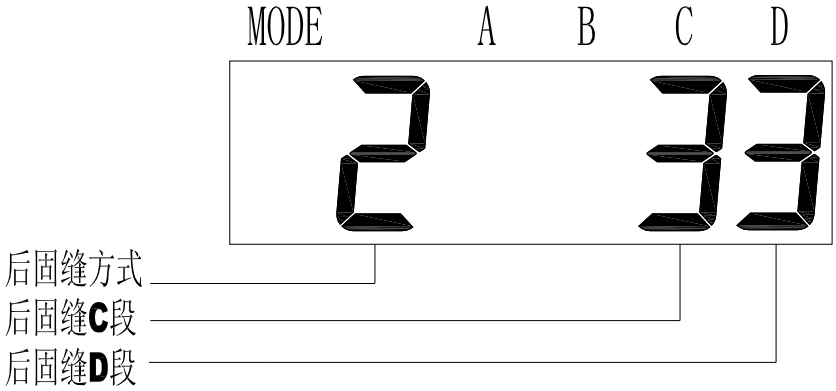

按，其上方对应的针数加一，在 0~F 之间循环切换，按 OK 键返回待机状态。

4.6 工艺参数设置

4.6.1 密码输入

1.在待机状态下连续按两次P键，P 灯点亮，其它 LED 灯全熄，此时便进入了工艺参数设置状态，数码管显示密码输入:界面如下图所示：

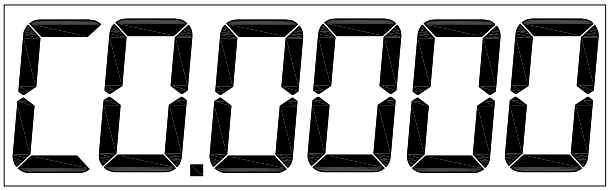

2.,按键,可以输入密码，(出厂密码 2222 输入后，按确认。如果所输入的密码正确，则进入工艺参数修改状态。显示如下：

4.6.2 工艺参数修改

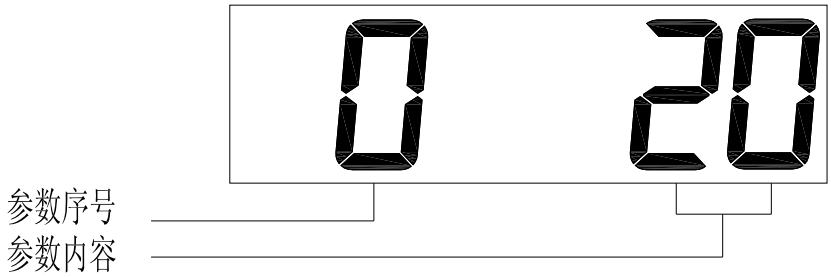

1.在工艺参数设定状态下,键为序号递增键,按该键可进行加 1 操作.,(序号值:0-99)

2 在状工艺参数设定态下,键为序号递减键,按该键可进行减 1 操作,,(序号值:0-99)

3各键在此状态下为参数设定键，每按一键，参数的对应位加 1（如果加 1 后的参数值超出该参数的范围则不加）；每一个参数设置完后按键，保存该参数值，再按一次键返回待机模式。

4.7 常用参数说明表

(单位说明: RPM 转/分钟; ms 毫秒; s 秒; hour 小时;)
序号带*表示该参数修改后需要重新上电才能生效.

序号	功能参数	默认值	设定范围	单位	参数说明
P0	踏板斜率	20	1~100	%	斜率越大，低速区域越大，速度变化越大；斜率越小，低速区域越小，速度变化越小。
P1	速度比例	8	1~8		自由缝最高速度的限定比例。将自由缝最高速度分成 8 等分，通过调整等分值来改变当前自由缝最高速度
P2	系统最低转速	200	150~500	RPM	缝纫时，机头最低转速限制
P3	自由缝最高转速	4000(平缝系列) 3000(双针系列) 5500(包缝系列)	150~5000 150~4000 150~7500	RPM	自由缝模式时，机头最高转速
P4	定速缝速度	3500(平缝系列) 3000(双针系列)	200~4000	RPM	定长缝自动触发时的缝纫速度
P5	前固缝速度	1800	200~3000	RPM	执行前固缝时的缝纫速度
P6	后固缝速度	1800	200~3000	RPM	执行后固缝时的缝纫速度
P7	前固缝完暂停	off	On/off		前固缝完毕暂停，需要踏板触发后模式才继续运行
P8	后固缝前暂停	off	On/off		后固缝前暂停，需要踏板触发才执行后固缝
P9	W 缝速度	1800	200~3000	RPM	W 缝模式时的缝纫速度
P15	倒缝最高速度	2500	200~3000	RPM	倒缝时的最高速度
P16	扫线通电时间	50	20~1000	ms	扫线电磁铁的动作时间
P17	暂停过程中按键是否吸合倒缝电磁铁	on	On/off		当电机不运转时，按倒缝键是否允许倒缝电磁铁动作
P18	针迹/速度优先	0	0~1		缝纫时，针迹或速度的优先级别设定 0：针迹优先 1：速度优先
P19*	抬压脚开关	On	On/off		开启或关闭抬压脚功能
P21	计数功能选择	0	0~2		0:无计数功能 1:底线计数功能 2:剪线计数功能

P22	慢启动针数	2	0~15		以慢启动速度缝纫的针数
P23	慢启动速度	500	200~3000	RPM	慢启动缝纫时的速度
P24	底线基数	10	1~100		底线变化多少针时，当前计数变化 1 个单位。
P25	底线总数	2000	1~9999		设定的底线总数
P26	当前计数	2000	0~9999		当前的底线数量
P27	倒缝全额启动时间	200	20~500	ms	倒缝电磁铁的初始出力时间
P28	倒缝通电时间	2	1~50	ms	倒缝电磁铁力度保持时的高电平时间
P29	倒缝断电时间	2	1~50	ms	倒缝电磁铁力度保持时的低电平时间
P34 *	上电找针位	On	On/off		上电后，是否自动找到上针位点。
P36	剪线速度	250	200~500	RPM	剪线时的运转速度
P37 *	半后踏自动抬压脚	on	On/off		开启或取消半后踏自动抬压脚
P39	第一针速度限定	3000	200-4000	RPM	第一针缝纫时的速度限定
P40	前固缝补偿参数 1	7（平缝系列） 12（双针系列）	0-16		前固缝针迹补偿参数 1
P41	前固缝补偿参数 2	5	0-16		前固缝针迹补偿参数 2
P42	后固缝补偿参数 1	7（平缝系列） 12（双针系列）	0-16		后固缝针迹补偿参数 1
P43	后固缝补偿参数 2	5	0-16		后固缝针迹补偿参数 2
P44	W 缝补偿参数 1	7（平缝系列） 12（双针系列）	0-16		W 缝针迹补偿参数 1
P45	W 缝补偿参数 2	5	0-16		W 缝针迹补偿参数 2
P46	手动老化开关	0	0/1		0：正常操作模式 1：老化拖车模式
P47	老化停顿时间	2000	100-9999	ms	老化时每次运行之间的时间间隔
P48	老化运行时间	2000	100 — 9999	ms	老化时每次运行的时间（在没有定位器时有效）
P49 *	电机运转方向	1	0/1		0:CCW 1:CW
P51 *	剪刀模式	0	0/1		0: 内置剪刀 1: 外置剪刀。
P52	外剪刀工作时间	100	30~9999	ms	外剪线的动作时间
P53	外扫线工作时间	70	20~9999	ms	外扫线的动作时间
P54	安全开关信号型式	0	0/1		0：常开 1：常闭

P56	机头工作时间	0	0~9999	hour	机头已经工作了多长时间(每个小时加 1)
P57	抬压脚启动时间	250	20~1000	ms	抬压脚电磁铁的初始出力时间
P58	抬压脚通电时间	2	1~50	ms	抬压脚电磁铁的力度保持时的高电平时间
P59	抬压脚关断时间	3	1~50	ms	抬压脚电磁铁的力度保持时的低电平时间
P60	抬压脚保护时间	20	1~120	s	抬压脚工作保护时间
P61	抬压脚延迟时间	50	20~800	ms	电机停转后，多长时间开始抬压脚
P62	放压脚延迟时间	50	20~800	ms	压脚放下后，多少时间才允许启动
P64 *	上电后自动抬压脚时间	0	0-900	s	上电后自动抬压脚的时间
P65	布边传感器功能选择	0	0－1		0：无布边传感器 1：有布边传感器
P66	布边传感器类型选择	2	0－3		0：N 输出低有效 1：N 输出高有效 2：P 输出低有效 3：P 输出高有效
P67	布边速度	800	200-5000	RPM	检测到布头信号后的运转速度
P68	全人工后踏剪线	311			311-剪线开启 非 311-剪线关掉
P69	布边延时启动时间	1000	100-9999	ms	检测到布头信号后的延时启动时间
P70	布头针数	10	1-100		布边传感器信号到针孔之间的距离
P71	布尾针数	10	1-100		布边传感器信号到针孔之间的距离
P73	有无布边传感器	off	On/off		是否有外接布边传感器
P74	倒缝/抬压脚气动选择	0	0－3		0：全部电动 1：倒缝气动 2：压脚气动 3：全部气动
P76	剪线次数	0	0-9999		每剪一次线计数加 1,加满清零
P77	针位信号输出控制	0	0-3		0:上针位输出低电平有效 1:下针位输出低电平有效 2:上针位输出高电平有效 3:下针位输出高电平有效
P98	参数恢复默认值	0000h	0-9999		
P99	工艺参数密码	2222h	0-9999		

5. 故障码/故障原因/故障排除方法表

故障显示代码	故障原因	故障排除方法
Err 1	系统故障	断电后检查机头是否卡住，然后重新上电，如果还不能解决，请联系售后服务人员
Err 2	系统过压	请检查电源电压是否正常？如果电源电压高于265V，关机，请等电源电压恢复正常再开机
Err 3	系统欠压	请检查电源电压是否正常？如果电源电压低于160V，关机，请等电源电压恢复正常再开机
Err 4	电机码盘故障	请检查电机连线是否正常。
Err 5	系统故障	重新上电，如果还不能解决，请联系售后服务人员
Err 6	系统故障	重新上电，如果还不能解决，请联系售后服务人员
Err 7	电机缺相	请检查电机电源线是否脱落或松动。
Err 8	电机堵转	1、 电机电源线是否脱落 2、 机头是否堵住 3、 电机码盘线是否松动 4、 上针位是否正确（有剪线动作的情况下）
Err 9	电机过载	1、 布料是否太厚 2、 机头是否堵住 3、 上针位是否正确（有剪线动作的情况下）
Err 10	电机超速	1.电机码盘信号丢失； 2.光栅信号与电控版本不匹配
Err 11	电机码盘故障	请检查电机码盘线是否松动
Err 12	脚踏脱落故障	请检查脚踏连接线是否松动
Err 13	脚踏上电时被踩下	请检查脚踏是否被卡住
Err 14	电磁铁投入时间过长	1、 上针位是否正确 2、 布料是否太厚或线太粗导致剪线动作不正常
Err 15	制动回路故障	请检查刹车电阻连接线是否松动
Err 17	电磁铁过流故障	电磁铁故障，请检查电磁铁是否损坏或短路。
Err 18	制动回路故障	请检查刹车电阻连接线是否松动
Err 19－21	定位系统故障	电机可继续运转，但无针数记数、针位定位及剪/扫线及倒缝功能 请检查磁钢是否正常。 请检查机头是否被卡住。
Err 22	上位机通信故障	请检查控制面板与驱动器的连线是否正常
Err 23	存储器故障	重新上电，如果还不能解决，请联系售后服务人员
Err 24	机头润滑时间到	加上机器润滑油，然后恢复机头运转时间
Err 25	布边传感器故障	
Err 26	上电时检测到有布	1、 将布拿开机器再重新来一次即可 2、 布边传感器设定错误,重新设定布边传感器类型 3、 布边传感器损坏

如果在现场仍然消除不了，请联系供应商。

6. 七段数码管显示值与实际数值对照表

数字部分：

实际字符	0	1	2	3	4	5	6	7	8	9
显示字符	0	1	2	3	4	5	6	7	8	9

英文字符：

实际字符	A	B	C	D	E	F	G	H	I	J
显示字符	A	b	C	d	E	F	G	H	I	J
实际字符	K	L	M	N	O	P	Q	R	S	T
显示字符	K	L	M	n	o	P	q	r	S	T
实际字符	U	V	W	X	Y	Z				
显示字符	U	v	W	H	Y	Z				

LIST

0. Main technical data.....18
1. Safety notice 18
1.1 Range of use.....19
1.2 Working conditions.....19
1.3 Installation.....19
1.4 Maintenance and inspection 20
1.5 Dangerous tips.....20
1.6 Other safety requirements.....20
2. Installation and adjustment.....20
2.1 Installation of the control box 20
2.2 Adjustment of needle stop position 20
2.3 Adjustment of the reverse pressure for foot presser 21
3. Connection and grounding 21
3.1 Connection of power supply.....21
3.2 Controller connection terminal map 22
3.2.1 General terminal connection diagram(lockstitch. interlock and overlock) 22
3.2.2 Special terminal connection diagram（overlock with the third sensor function）.....23
3.2.3 Special terminal connection diagram（cylinder bed overlock）.....24
4. Operating description of main control box panel 26
4.1 Layout of main control box panel as follows.....25
4.2 Holding state 25
4.3 Sewing mode and each section stitches set 26
4.4 Fore-tacking sewing and stitches set 27
4.5 Back-tacking sewing and stitches set.....28
4.6 Technical parameter set.....28
4.7 Common parameter description.....29
5. Table of error codes/cause/remedy.....34
6. Table of the seven-segment LED display value and actual value comparison.....35

0. Main technical data

Range of voltage：AC220V±15%
Power frequency：50Hz/60Hz

1. Safety notice

1.1 Range of use

The server-motor is designed for industry sewing machine, when using for other applications, please make sure that the users are safe.

1.2 Working conditions

1.2.1 Any fluctuations in the power voltage should be within the range of ±15% according to the control box marked.

1.2.2 In order to avoid error caused by disturbing control box, please keep away from high frequency electromagnetic emitter.

1.2.3 Humidity

a. The ambient temperature should be within the range of 5℃ to 45℃ during using.
b. Avoid exposure to direct sun or outdoors during using.
c. Keep away from the heating (heater) during using.
d. The relative humidity should be within the range of 30% to 95%.

1.2.4 Keep away from flammable gases or explosive during using.

1.3 Installation

1.3.1 Please install the controller correctly according to the introduction.

1.3.2 Please turn off and disconnect the power cord before installation.

1.3.3 Please keep away from rotating parts when installing the power cord, the distance should be at least 3cm.

1.3.4 In order to prevent noise interference or electric accident, make sure that the sewing machine and the control box are connected to ground. ⚠

1.3.5 Make sure that the fluctuation in the power voltage should be within the range of ±15% according to the control box marked before turning on.

1.4 Maintenance and inspection

1.4.1 Please turn off before maintenance or inspection.

1.4.2 Make sure that the power switch is turned off when turning the machine head, replacing needle or rotary hook.

1.4.3 It is very dangerous because of high voltage inside the control box, if you want to uncover the control box, more than 5 minutes is needed to wait after power off.

1.4.4 Maintenance and inspection of the sewing machine should only be carried out by a qualified technician.

1.4.5 Forbidden to do maintenance and inspection when the motor is running.

1.4.6 All components for repair should be provided or approved before using.

1.5 Dangerous tips

This symbol indicates something you should be careful of when installing, failing to follow the instruction could cause injury when using the machine physical damage to equipment and surroundings.

1.6 Other safety requirements

1.6.1 Please operate the sewing machine at low-speed and check whether the direction of rotation is correct for the first time to power on.

1.6.2 Please don’t touch the up wheel ,needle and other action parts when the sewing machine is running .

1.6.3 To prevent physical contact, all action parts must be isolated by protective devices, and please don’t put anything into the devices.

1.6.4 Forbidden to operate at the circumstance of motor hood and other safety devices removed.

1.6.5 Don’t let motor or control box fall to ground.

1.6.6 Don’t let liquid ,such as tea, flow into the control box or motor.

2. Installation and adjustment

2.1 Installation of the control box

2.1.1 Install the control box and the foot-controllor beneath the table.

2.1.2 Please connect the pedal with the control device

2.1.3 Installation diagram

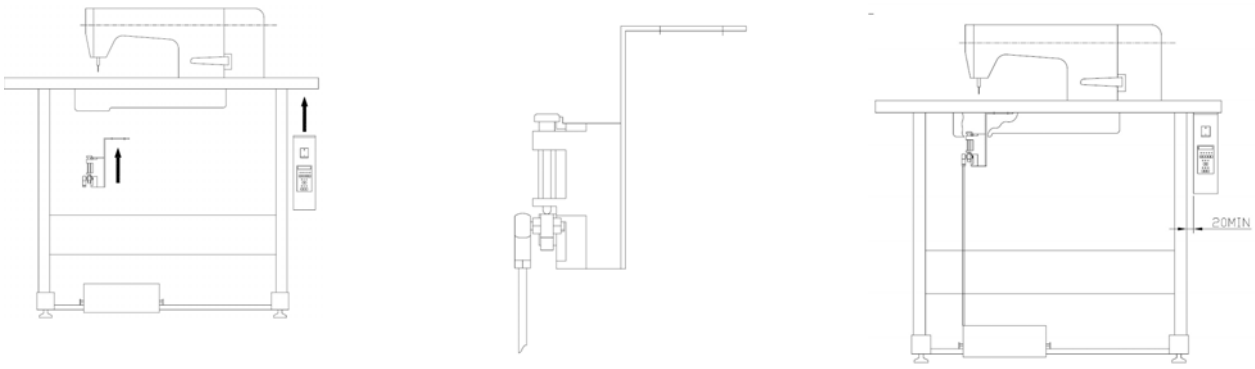

2.2 Adjustment of needle stop position

2.2.1 Release the magnet fixed screw of the hand wheel, re-fix after position adjustment.

2.2.2 If the actual needle stop position exceed the expected needle up position, adjust the magnet fixed plate on the indicative direction of the hand wheel rotation, conversely, adjust the hand wheel on the reverse direction of hand wheel rotation.

2.3 Adjustment of the reverse pressure for foot presser

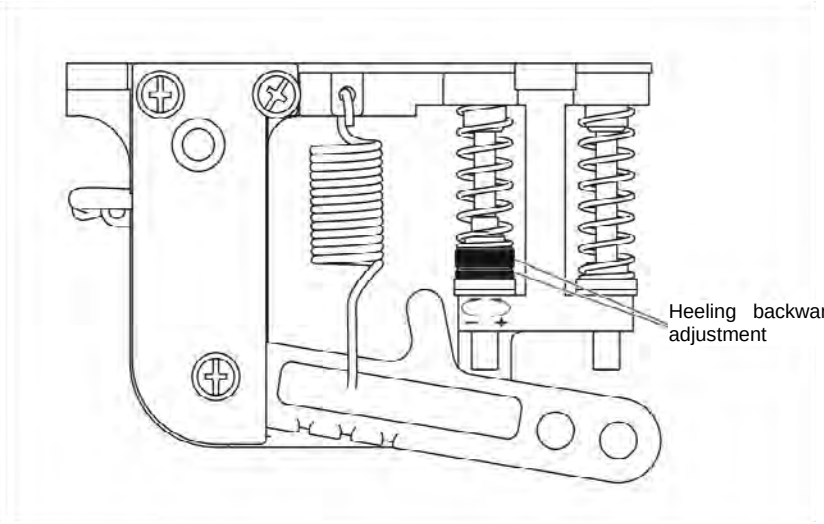

Adjustment requirements	Adjustment result
Adjustment of the reverse pressure for foot presser	Rotate the bolt at up, the reverse pressure will be heavy. Rotate the bolt at down, the reverse pressure will be light.

3. Connection and grounding

3.1 Connection of power supply

The controller is suitable for power supply of AC220V (one phase), the fluctuation of input voltage is within ±15% as the plate marked.

⚠	Notice: The yellow /green power line are connected to ground, the connection to ground must be well done for insurance of safety and devices reliable to work.

3.2 Controller connection terminal map）

3.2.1 General terminal connection diagram(lockstitch. interlock and overlock)

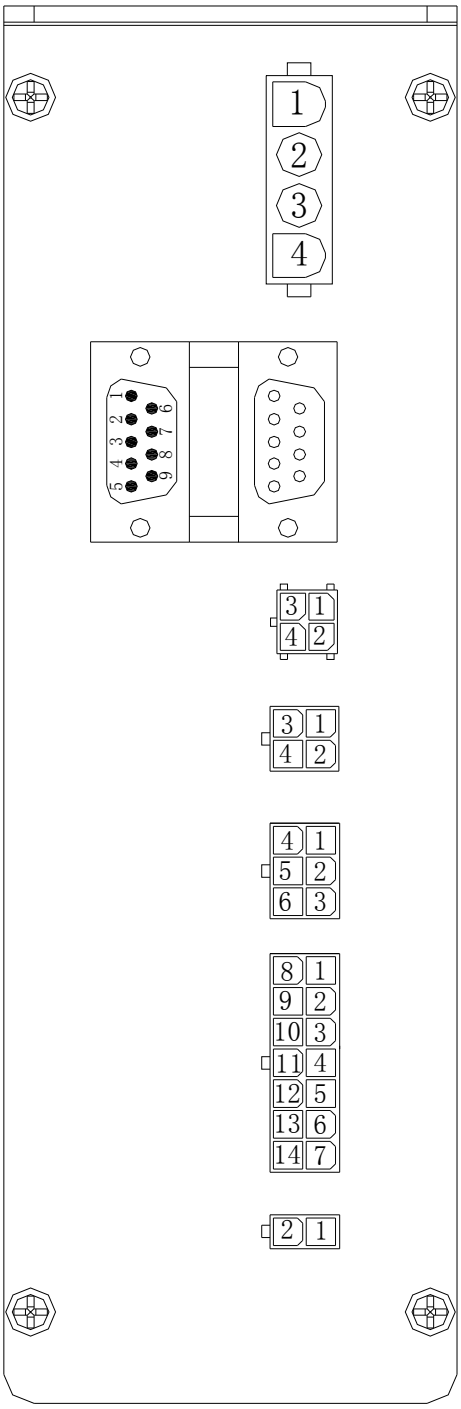

1. Ground
2. U phrase output
3. V phrase output
4. W phrase output

1. +5V
2. speed signal
3. stand foot pedal trimming control
4. stand foot pedal identify
5. GND
6. GND
7. GND
8. stand foot pedal foot presser control
9. +5V

1. TXD 2. +12V
2. RXD 4. GND

1. NC 2. safety switch
3. NC 4. +5v

1. needle position output 2. GND 3. GND
4. cloth edge sensor signal 5. GND
6. cloth edge sensor power

1. +30V 2.+30V 3.ground 4.+30V
5. GND 6. +30 PWM 7. GND 8.trimming output
9. thread sweep output 10. +30V 11.NC
12. manual reverse sewing switch
13. reverse sewing output
14. +5V lighting

1. +30V PWM
2. foot presser output

3.2.2 Special terminal connectiondiagram（overlock with the third sensor function）

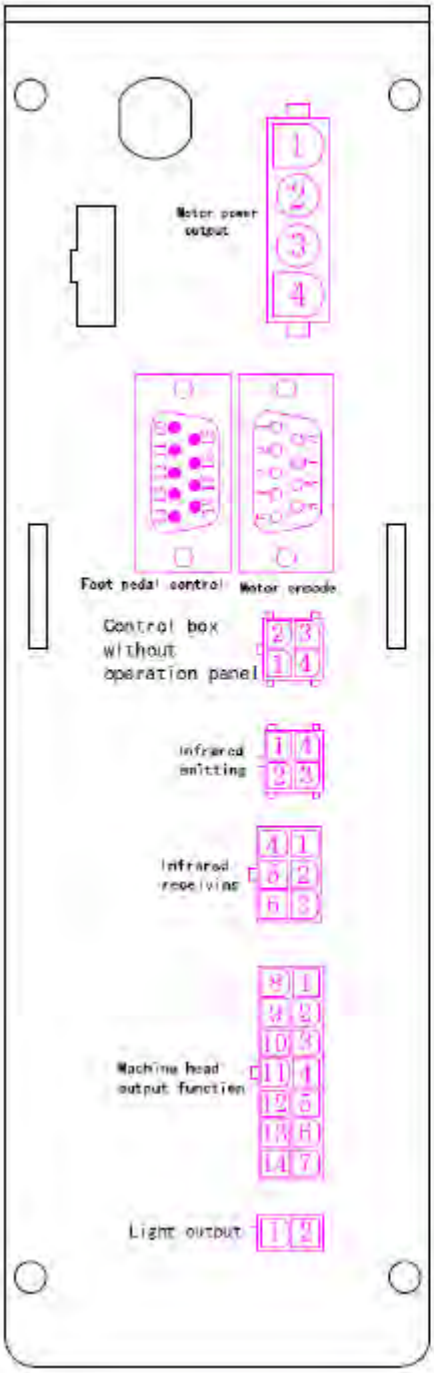

1	Ground			Motor power output			
2	U phrase output						
3	V phrase output						
4	W phrase output						
Foot pedal control				Motor encode			
10	+5V	15	GND	1	+5V	6	UH
11	speed signal	16	GND	2	upper needle position	7	VH
12	stand foot pedal trimming control	17	Stand foot pedal foot presser control	3	lower needle position	8	WH
13	Stand foot pedal identify	18	+5V	4	Encoder B	9	GND
14	GND			5	Encoder A		
2	RXD	3	TXD	Control box without operation panel			
1	GND	4	+12V				
1	Before the infrared receiving	4	+5V	Infrared emitting			
2	Infrared emitting	3	After infrared emitting				
4	Before infrared receiving	1	+5V	Infrared receiving			
5	Infrared receiving	2	+5V				
6	After infrared receiving	3	+5V				
8	Thread trimmer solenoid	1	+30V	Machine head output function			
9	Presser foot solenoid	2	+30V				
10	Air suction	3	Reserved				
11	Puller solenoid	4	Reserved				
12	Presser foot safety switch	5	GND				
13	Manual switch	6	GND				
14	Operation bed safety switch	7	+5V				
1	+12V	2	Lighting output	Light output			

3.2.3 Special terminal connection diagram（cylinder bed overlock）

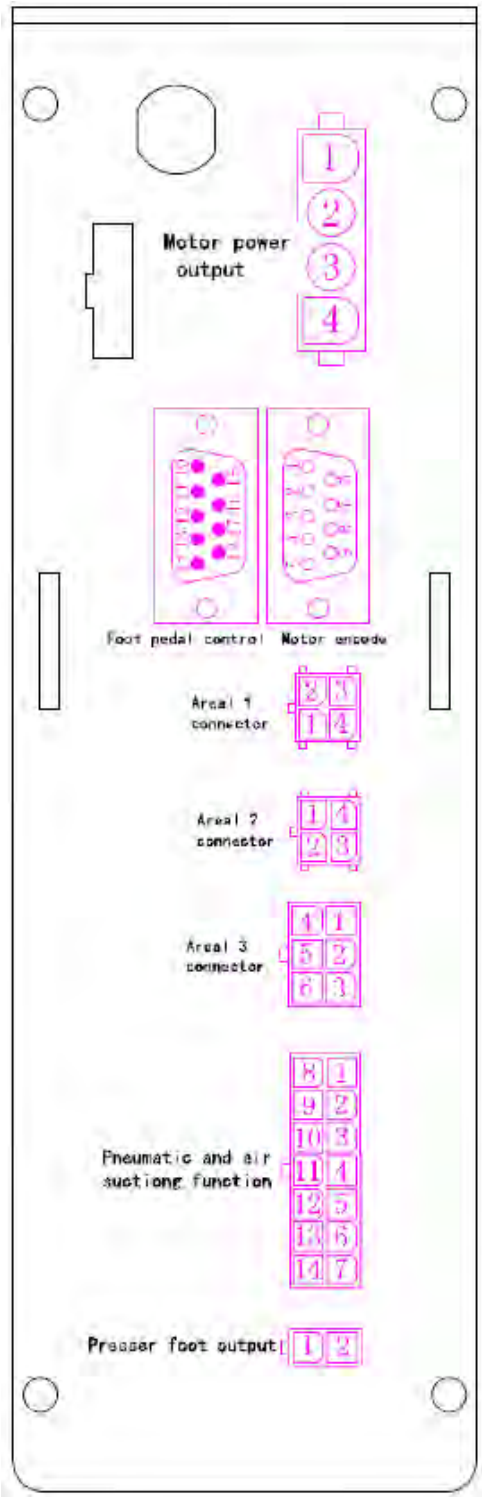

1	Ground			Motor power output			
2	U phrase output						
3	V phrase output						
4	W phrase output						
Foot pedal control				Motor encode			
10	+5V	15	GND	1	+5V	6	UH
11	speed signal	16	GND	2	upper needle position	7	VH
12	stand foot pedal trimming control	17	Stand foot pedal foot presser control	3	lower meedle position	8	WH
13	Stand foot pedal identify	18	+5V	4	Encoder B	9	GND
14	GND			5	Encoder A		
2	Reserved	3	Reserved	Area1 1 connector			
1	Reserved	4	Reserved				
1	Reserved	4	Reserved	Area1 2 connector			
2	Reserved	3	Reserved				
4	Reserved	1	Reserved	Area1 3 connector			
5	Reserved	2	Reserved				
6	Reserved	3	Reserved				
8	Reserved	1	Reserved	Pneumatic and air suctiong function			
9	Knee control switch	2	+30V				
10	Reserved	3	Reserved				
11	Reserved	4	Reserved				
12	Presser foot safety switch	5	GND				
13	Manual switch	6	GND				
14		7	+5V				
1	+12V	2	presser foot output	Presser foot output			

4. Operation description of the main control box panel

4.1 Layout of the main control box panel as follows

Layout of the main control box panel as follows, it includes six digital tube (T1-T6),eleven LED and ten buttons, the panel includes five states: holding mode, sewing mode set, fore-tacking mode set, back-tacking mode set, technical parameter set.

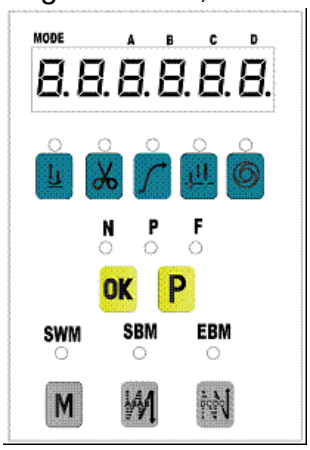

4.2 Holding state

1.The panel displays holding state when power on, N、P、F、SWM、SBM、EBM are turned off, the LED lamps at the top of function keys display according to the current parameter.

T1,T2 digital tube display current sewing mode(00:free sewing; 01:constant-dimension sewing; 02: four- segment sewing ; 03: seven -segment sewing; 04: eight-segment sewing; 05:W sewing),other digital tubes display “-”。Take current sewing mode free sewing for example, it displays as follows :

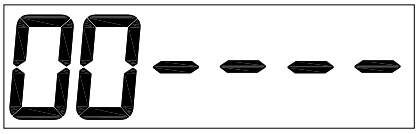

2.Choose button, the corresponding functions of foot presser, thread trimmer ,slow start-up, needle stop position,automatic triggers and so on will be set or canceled, meanwhile the corresponding LEDs are on or off.

4.3 Sewing mode and each section stitches setting

Press button at the holding state, then it goes into sewing mode set state: SWM is on, and other LEDs are off.

T1,T2 digital tube display current sewing mode(00:free sewing;01: constant-dimension sewing;02:four-segment sewing; 03:seven-segment sewing; 04:eight-segment sewing; 05:W sewing), if it is constant-dimension sewing or multi-segment sewing ,T3 digital tube display current section code “E、F、G、H”,T5 and T6 digital tube display current section stitch.

Take four-segment sewing for example, it displays as follows:

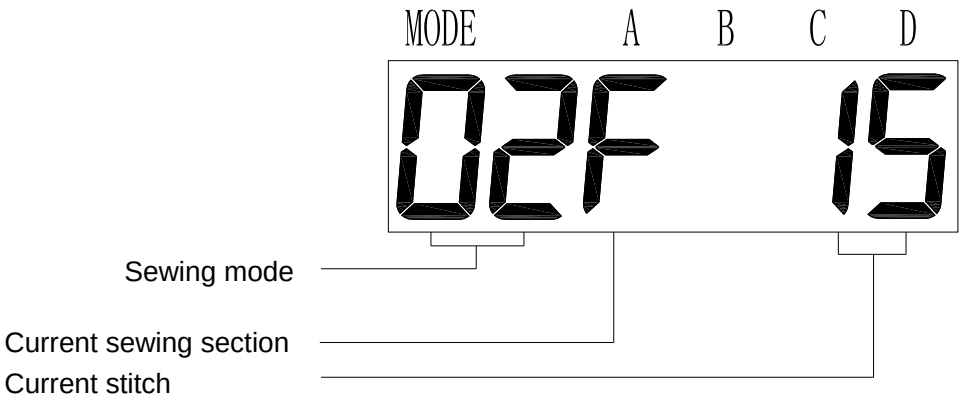

It doesn’t display current sewing section if it is at free sewing .

Selection of sewing mode、section number and stitches:

1.Press button, T1,T2 digital tube can display circulately current sewing mode among 00~05;

2. Press button ,T3 digital tube can display circulatly current section number among “E、F、G、H”.

3. Press or button, corresponding stitches added 10 or 1 and circulae among 0-99; 、 is invalid; press button, it returns to the holding mode .

4.4 Fore- tacking sewing mode and stitches set

1. Press button at the state of holding, sewing mode set or fore-tacking set, it all can go into the state of fore-tacking set, meanwhile SBM is on, other LED is off, T1 display current fore-tacking sewing mode.

2.Press button, T1 digital tube display circularly fore-tacking sewing mode : 0(no fore-tacking sewing),1(single fore-tacking sewing),2(double fore-tacking sewing) 3(four fore-tacking sewing),T3、T4 display current tacking sitches respectively, take double fore-tacking sewing for example ,it displays as follows:

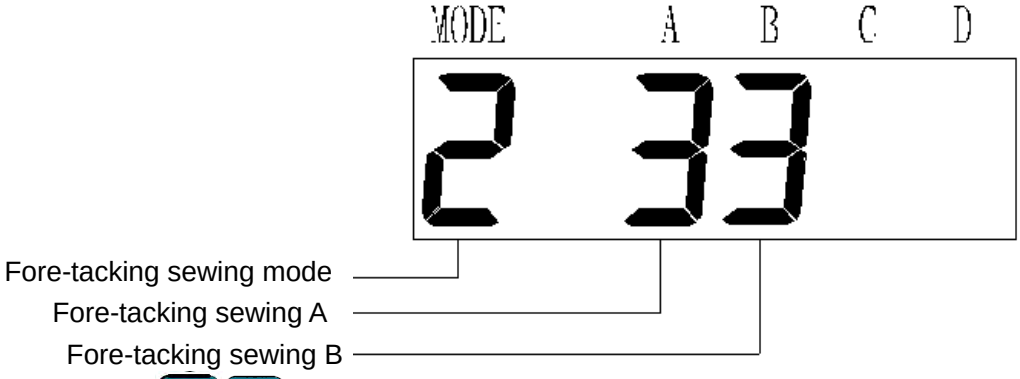

Press button, the corresponding stitches above added 1,switch circularly among 0-F ,press button, it returns to the holding state.

4.5 Back-tacking sewing and stitches set

1.Press button at the state of holding, sewing mode set or back-tacking set,it all can go into back-tacking mode setting state, meanwhile EBM is on, other LED is off, T2 display current back-tacking mode .

2. Press button, T2 digital tube display circularly back-tacking sewing mode: 0(no back-tacking sewing)、1（single back-tacking sewing）、2（double back-tacking sewing）、3（four back-tacking sewing）.

3. T5、T6 display current stitches of back-tacking sewing respectively ,take double back-tacking sewing for example ,it displays as follows:

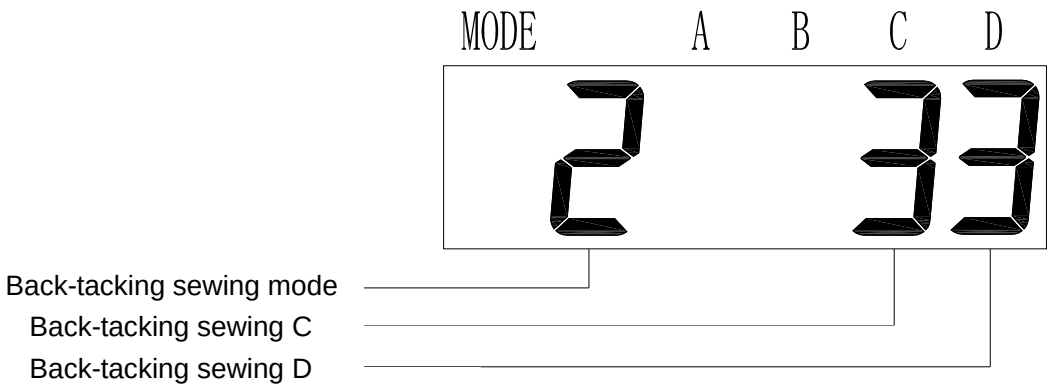

Press button, the corresponding stitches above added 1, switch circularly among 0-F, press button, it returns to the holding state.

4.6 Technical parameter set

4.6.1 Password input

1. Press twice continually at the holding state, P light is on ,other LED is off, it goes into the state of technical parameter setting, digital tube display password input as follows :

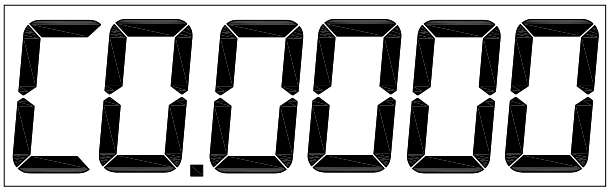

2. Press button,it can input password, the inital input password is 2222,press to confirm, if the entered password is correct ,then it goes into the state of modifying technical parameter ,display as follows :

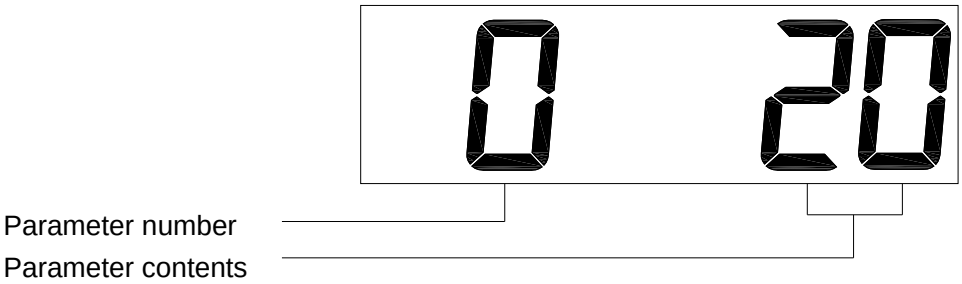

4.6.2 Modify the technical parameter

1. At the technical parameter setting state, is sequence increasing key,press this key can do operation of added 1(sequence:0-99)

2.At the technical parameter setting state, is sequence descending key,press this key can do operation of minus 1(sequence :0-99).

3. are parameter setting key at this state, press the key once, parameter of corresponding bit adds 1(it will not continue if the parameter overflow after adding);press key to save the parameter after setting, press key again to return to the holding state .

4.7 Common parameter description

The parameters marked with *mean that they should re-power after amended.
(Unit: RPM; ms ; s ; hour)

Sequence	Function parameter	Default	Setting range	unit	Parameter description
P0	Pedal slope	20	1~100	%	The bigger the slope is, the larger the low-speed region is, and the faster the speed change is; the smaller the slope is, the narrower the low-speed region is, and the lower the speed change is.
P1	Speed proportion	8	1~8		Presser proportion of the maximum speed of reverse sewing. The maximum seed is equally divided into eight parts, current speed can be modified through adjusting parts.
P2	System minimum speed	200	150~500	RPM	The minimum speed of machine head when sewing.
P3	Maximum speed of the reverse sewing	4000(lockstitch series) 3000(double needle series) 5500(overlock stitch series)	150~5000 150~4000 150~7500	RPM	The maximum speed of machine head at the reverse sewing.
P4	Fixed sewing speed	3500(lockstitch series) 3000(double needle series)	200~4000	RPM	Sewing speed of fixed sewing speed.
P5	Fore-tacking sewing speed	1800	200~3000	RPM	Sewing speed of fore-tacking.
P6	Back-tacking sewing speed	1800	200~3000	RPM	Sewing speed of back-tacking.

P7	Suspend when the fore-tacking finished.	off	On/off		Pedal trigger is needed to continue operating when suspend at fore-tacking finishing.
P8	Suspend when the back-tacking finished.	off	On/off		Pedal trigger is needed to continue operating when suspend at back-tacking finishing.
P9	W sewing speed	1800	200~3000	RPM	Sewing speed at W sewing mode.
P15	Maximum speed of reverse sewing.	2500	200~3000	RPM	Maximum speed of reverse sewing.
P16	Working time of thread sweep	50	20~1000	ms	Working time of thread sweep electromagnet.
P17	Whether the reverse sewing key will be absorbed when the motor stops.	On	On/off		When the motor stops, and the key pressed, whether the electromagnet act or not.
P18	Stitch/speed priority	0	0~1		Stitch or speed priority setting during sewing: 0:stitch priority 1:speed priority
P19*	Foot presser switch	On	On/off		Turn on/off the function of foot presser.
P21	Selection of counting function	0	0~2		0:Non-counting function 1:Bobbin thread counting function 2:Trimming thread counting function
P22	Slow-startup counting	2	0~15		Stitches when sewing at slow -startup speed
P23	Slow-startup speed	500	200~3000	RPM	The sewing speed at slow-startup.
P24	Bobbin–thread base number	10	1~100		How many stitches changes on bobbin–thread, the current count change one unit.
P25	Total number of bobbin–thread	2000	1~9999		Total number of bobbin-thread setting.
P26	current counting	2000	0~9999		Current amount of bobbin -thread.
P27	Full PWM on time of reverse sewing	200	20~500	ms	Initial startup time of reverse sewing electromagnet.
P28	PWM on time of reverse sewing	2	1~50	ms	PWM on time of reverse sewing when the electromagnet holding on.

P29	PWM off time of reverse sewing	2	1~50	ms	PWM off time of reverse sewing when the electromagnet holding on.
P34*	Automatic finding needle position	On	On/off		Whether automatic finding the needle up position at PWM on time.
P36	Trimming speed	250	200~500	RPM	Operating speed when trimming.
P37*	Automatic lift foot presser of half back step	on	On/off		Start or cancel automatic lift foot presser of half back step.
P39	Speed limitation of the first stitch	3000	200-4000	RPM	The limitation for the speed of the first sewing stitch.
P40	Fore-tacking sewing compensation parameter 1	7（lockstitch serie） 12（two-needle lockstitch serie ）	0-16		Fore-tacking stitch sewing compensation parameter 1.
P41	Fore-tacking sewing compensation parameter 2	5	0-16		Fore-tacking sewing stitch compensation parameter 2.
P42	Back-tacking sewing compensation parameter 1	7（lockstitch series） 12（two-needle lockstitch series）	0-16		Back-tacking sewing stitch compensation parameter 1.
P43	Back-tacking sewing compensation parameter2	5	0-16		Back-tacking sewing stitch compensation parameter 2.
P44	W sewing compensation parameter 1	7（lockstitch series） 12（two needle lockstitch series）	0-16		W sewing stitch compensation parameter 1.
P45	W sewing compensation parameter 2	5	0-16		W sewing stitch compensation parameter 2.
P46	Manual test mode switch	0	0/1		0： normal operation mode 1： test mode
P47	Manual test mode switch	2000	100-9999	ms	The interval time between each operation at test mode
P48	Operating time of test mode	2000	100－9999	ms	Each operating time of the test mode.

P49*	Motor operation direction	1	0/1		0:CCW 1:CW
P51*	Scissors mode	0	0/1		0: built-in scissors 1: built-out scissors
P52	Working time of built-out scissors	100	30~9999	ms	Working time of built-out scissors.
P53	Working time of external thread sweep	70	20~9999	ms	Working time of external thread sweep.
P54	Type of safety switch signal	0	0/1		0: open 1:shut
P56	Working time of machine head	0	0~9999	hour	How many hours the machine head have worked.(add 1 per hour)
P57	Startup time of lifting foot presser	250	20~1000	ms	Initial startup time of lifting foot presser electromagnet.
P58	PWM on time of lifting foot presser	2	1~50	ms	PWM on time of lifting foot presser when the electromagnet holding on.
P59	PWM off time of lifting foot presser	3	1~50	ms	PWM off time of lifting foot presser when the electromagnet holding on.
P60	Protection time of foot presser lifting	20	1~120	s	Protecting time of foot presser lifting during working.
P61	Delay time of lifting foot presser	50	20~800	ms	How long will it be to start to lift foot presser after the motor stop.
P62	Delay time of downing foot presser	50	20~800	ms	How long is it allowed to startup after foot presser is down.
P64*	Automatic foot presser lifting time with power on	0	0-900	s	Time of automatic lifting foot presser with power on.
P65	Function selection of cloth edge sensor	0	0－1		0：no cloth edge sensor 1：cloth edge sensor
P66	Selection of cloth edge sensor type	2	0－3		0：N output is effective at low 1：N output is effective at high 2：P output is effective at low 3：P output is effective at high
P67	Speed of cloth edge	800	200-5000	RPM	Operating speed when detecting cloth edge signal.
P68	Thread trimming(bac k step) Manual type	311			311 thread trimmer turned on Non 311, thread trimmer turns off

P69	Delay-startup time of cloth margin	1000	100-9999	ms	Delay-startup time when detecting cloth head signal.
P70	Stitch of cloth head	10	1-100		The distance between Cloth edge sensor signal and needle hole.
P71	Stitches of fabric edge	10	1-100		Distance of the fabric edge sensor signal to the needle plate hole
P73	Cloth edge sensor	off	On/off		Whether there is an external cloth edge sensor.
P74	Selection of back stitch/ foot presser lifting air-operated	0	0—3		0：all electric-operated 1：reversing air-operated 2：presser foot air-operated 3：all air-operated
P76	Number of trimming	0	0-9999		Adding 1 to the counter per trimming, clear to zero when the counter is full.
P77	Control of needle position signal output	0	0-3		0: The output of needle up position is effective at low 1: The output of needle down position is effective at low 2: The output of needle up position is effective at high 3: The output of needle down position is effective at high
P98	Parameter recover to default	0000h	0-9999		
P99	Technical parameter password	2222h	0-9999		

5. Table of error codes/cause/remedy

Error code	Cause	Remedy
Err 1	System error	Check whether the machine head is stuck, and then re-power, if the malfunction have not been solved yet, please contact after-sale service.
Err 2	Overload voltage	Please check whether the power supply voltage is normal, if the power supply voltage is higher than 265V, turn off the machine, and restart the machine until the power supply voltage is normal .
Err 3	Download voltage	Please whether check the power supply voltage is normal, if the power supply voltage is lower than 160V, turn off the machine, and restart the machine until the power supply voltage is normal.
Err 4	Motor code wheel error	Please check whether the motor electrical connection is normal.
Err 5	System error	Re-power , if the malfunction have not been solved yet ,please contact the after-sale service person.
Err 6	System error	Re-power , if the malfunction have not been solved yet ,please contact the after-sale service person.
Err 7	Motor lack phase	Please check whether the motor power cord is off or loose.
Err 8	Motor locked-rotor	1. Check whether the motor power cord is off. 2. Check whether the machine head is stuck. 3. Check whether motor code wheel cord is loose. 4.Check whether the needle up position is correct (at the case of thread trimming movement).
Err 9	Motor overload	1. Check whether the fabric is too heavy. 2. Check whether the machine head is stuck. 3. Check whether the needle up position is correct (at the case of thread trimming movement).
Err 10	Motor over speed	1.Motor encode signal lost 2. Grating signal doesnot match the control box version
Err 11	Motor code wheel error	Please check whether the motor code wheel cord is loose.
Err 12	Foot-controller dropped off error	Please check whether the foot-controller connection is loose.
Err 13	Foot-controller was off when turning on the electricity	Please check whether the foot-controller is stuck.
Err 14	The time of using Electromagnet is too long	1. Check whether the needle up position is correct. 2. Check whether the fabric is too heavy or the line is too thick to cut the line normally.
Err 15	Brake circuit error	Please check whether the brake resistor cable is loose.
Err 17	Electromagnet overload current error	Electromagnet error, please check whether the electromagnet is broken or short circuit.
Err 18	Brake circuit error	Please check whether the brake resistor cable is loose.

Err 19－21	Located system error	Motor can continue to operate, but there are no needle count, needle location ,trimming/sweep and reverse stitch function. Please check whether the alnico is normal. Please check whether the machine head is stuck.
Err 22	Machine up position communication error	Please check whether the connection of the control panel and the drive is normal.
Err 23	Memory error	Re-power, if the error has not been solved yet ,please contact the after-sale service person.
Err 24	Machine head lubrication time is up	Add the lubrication oil , and then recover the operate time of machine head.
Err 25	Fabric edge sensor error	
Err 26	Detected cloth when turning on the electricity	1. Take the cloth away and retry. 2.The cloth edge sensor setting is wrong, reset the type of cloth edge sensor. 3.The cloth edge senor is broken.

If the error still can not be resolve, please contact the supplier .

6. Table of the Seven-Segment LED display value and actual value comparison

Figure part：

Actual character	0	1	2	3	4	5	6	7	8	9
Display character	0	1	2	3	4	5	6	7	8	9

English character：

Actual character	A	B	C	D	E	F	G	H	I	J
Display character	A	b	C	d	E	F	G	H	I	J
Actual character	K	L	M	N	O	P	Q	R	S	T
Display character	t	L	M	n	o	P	q	r	S	T
Actual character	U	V	W	X	Y	Z				
Display character	U	v	W	H	Y	Z				